LED DISPLAYS

lighting the way ahead

OXLEY

Contents

Introduction

LED Panel Indication 3
LED Bulb Replacement 3
Selection Chart 4
Lamp Sealing 5
Oxley Indicator Lamp Selection Chart (Descriptive Breakdown) 6
Sealing Characteristics 6
Lens Characteristics 7
Terminals 9
Secure XIR Lighting 9

Lamps

Ø5.0 ..... Sub-Miniature Cone Lock Indicator Lamp - Metal body LED SSI/5 11
Ø5.0 ..... Sub-Miniature Cone Lock Indicator Lamp - Plastic body MI/5 12
Ø5.0 ..... Sub-Miniature Flat Lens OXL/MIL50 13
Ø5.0 ..... Sub-Miniature Sunlight Viewable, Flat Lens OXL/MIL50 14
Ø5.0 ..... Voltage Sub-Miniature, Flat Lens OXL/MIL50 15
Ø5.0 ..... Sub-Miniature Flat lens, Two-part OXL/MIL50 17
Ø6.35 ... Low Profile and Flush Mounting, Fresnel Lens OXL/CLH/63 18
Ø6.35 ... Prominent Wide Viewing Fresnel Lens OXL/CLH/63 20
Ø8.0 ..... Panel Sealed, Convex Lens PS/LH/8 22
Ø8.0 ..... Panel Sealed, Domed Lens PS/LH/8 23
Ø8.0 ..... Panel Sealed, Caption Indicator PS/LH/8 24
Ø8.0 ..... Panel Sealed, 30 deg viewing - Sunlight Viewable PS/LH/8 25
Ø8.0 ..... Panel Sealed, 100 deg viewing - Sunlight Viewable PS/LH/8 26
Ø8.0 ..... Panel Sealed, Two-part lamp PS/LH/8 27
Ø8.0 ..... Panel and Lamp Body Sealed, Domed Lens STR/LH/8 28
Ø8.0 ..... Panel and Lamp Body Sealed, Convex Lens STR/LH/8 29
Ø8.0 ..... Panel and Lamp Body Sealed, Sunlight 100 deg Viewable .. STR/LH/8 31
Ø8.0 ..... Panel and Lamp Body Sealed, Sunlight 30 deg Viewable STR/LH/8 33
Ø8.0 ..... DESC 85122 Approved Indicator Lamps, Single Chip LED .. STR/LH/8 35
Ø8.0 ..... DESC 87019 Approved Indicator Lamps, Single Chip LED .. STR/LH/8 36
Ø8.0 ..... Panel and Lamp Body Sealed, Mains AC Voltage STR/LH/8 37
Ø8.0 ..... Panel and Lamp Body Sealed, Mains AC Voltage STR/LH/8 38
Ø8.0 ..... Panel and Lamp Body Sealed, Neon Bulb, Flying Lead STR/NLH/8 39
Ø8.0 ..... Panel and Lamp Body Sealed, Neon Bulb, Tag terminals STR/NLH/8 40
Ø8.0 ..... Panel and Lamp Body Sealed, Rear Mounting STR5/LH/8 41
Ø8.0 ..... Panel and Lamp Body Sealed, Sunlight 30 deg Viewable STR5/LH/8 42
Ø8.0 ..... Panel and Lamp Body Sealed, Sunlight 100 deg Viewable .. STR5/LH/8 43
Ø8.0 ..... Indicator Lamps, Rear Mounting, Voltage STR/501/LH/8 44
Ø8.0 .... Panel Sealed, Bezel LED Indicator OXL/CLH/80 46
Ø8.0 ..... Panel Sealed, Bezel Prominent LED Indicator OXL/CLH/80/P/BB 48
Ø10.0 ... Panel and Lamp Body Sealed, Domed Lens STR/LH23/10 49
Ø10.0 ... Two-Part LED Indicator, Domed Lens STR/LH23/10 51
Ø10.0 ... Bi-Segmented LED Indicator Single Chip LED 2STR/LH23/10 52
Ø10.0 ... Tri-Segmented LED Indicator Single Chip LED 3STR/LH23/10 55
Ø10.0 ... Low Profile Indicator, Fresnel Lens OXL/CLH/100 57

Oxley Group Australia Pty Ltd
Email: sales@oxleygroup.com
Tel +61 (0) 2 9967 9488

Oxley Inc.
Email: sales@oxleyinc.com
Tel: +1 (203) 488 1033

Oxley Developments Company Ltd
Email: sales@oxley.co.uk
Tel: +44 (0) 1229 840609

Ø10.0 ... Prominent Lens, Fresnel Lens..... OXL/CLH/100/P 59
Ø10.0 ... Bi/Tri-Segmented Indicator Lamps, Fresnel Lens 20XL/CLH/100/-
.... 30XL/CLH/100/-.....61

T1¾..... LED Bulb Replacement, Single Chip LED..... ELED/1750/- 62
T1¾ ..... LED Bulb Replacement, Multi-Chip LED ELED/1750/- 64
T1¾ ..... LED Bulb Replacement, Multi-Chip LED, Bipolar, ... ELED/1750/- 65
T1 ..... LED Bulb Replacement, Single Chip LED..... ELED/682/- 66

Options

Recommended Mounting Hardware and Material Details.....67
Flying Leads 69
Lamp Test Facility 70

Technical Information

Circuit Diagrams 71
Lens Design 72

Additional information

The CIE System 73
Spectral Diagram 73

Oxley Developments Company Ltd
Email: sales@oxley.co.uk
Tel: +44 (0) 1229 840609

Oxley Inc.
Email: sales@oxleyinc.com
Tel: +1 (203) 488 1033

Oxley Group Australia Pty Ltd
Email: sales@oxleygroup.com
Tel +61 (0) 2 9967 9488

www.oxleygroup.com/lamps
ODCSM40565/2/2005

LED Panel Indication

Oxley Light Emitting Diode (LED) Indicator lamps combine the latest in LED technology with Oxley mechanical and optical expertise to provide a wide range of Panel Mounting Indicator lamps for both benign and hazardous environments.

With the exciting advances in LED Technology and the continuation of existing Panel Mounting Lamp ranges many options are available including wide angle and focussed viewing; Sunlight readability and Night Vision Goggle Compatibility (NVG).

With Oxley's knowledge and experience within the field of opto-electronics we can address high reliability applications, where LEDs are electrically screened ensuring typical Mean Time Before Failure (MTBF) ranging from 90,000 hours to in excess of 200,000 hours.

Oxley have a variety of LED Indicator lamps available which have various sealing specifications ranging from IP66 to IP 68, with low current models also available. All variants have optional flame retardant flying lead terminations which can be colour coded to suit customers special requirements.

Traditionally designed for the most demanding of applications both military and non-military, many devices are approved by the UK MoD and US DoD and hold allocated NATO Stock Numbers. An extensive range of products suitable for commercial and industrial applications is also available

With monitoring hole diameters ranging from 5 mm to 10 mm and with many other options and features available we can provide suitable LED Panel Indication for all applications where needed.

LED Bulb Replacement

With the increasing brightness of LEDs, Oxley have introduced a wide range of filament replacement LEDs.

Both uni-polar and bi-polar options are available which operate from either AC or DC voltages. This product range is ideal for fit-and-forget use in professional illuminated pushbutton switches and annunicators.

Available in either T1 or T1¾ as standard, telephone slide base, BA7, BA9 are also available on request with operating voltage ranges from 5 V to 240 V dc/ac dependant on the product type.

Options include a choice of six high intensity colours (red, orange, yellow, green, blue and white).

Oxley Group Australia Pty Ltd
Email: sales@oxleygroup.com
Tel +61 (0) 2 9967 9488

Oxley Inc.
Email: sales@oxleyinc.com
Tel: +1 (203) 488 1033

Oxley Developments Company Ltd
Email: sales@oxley.co.uk
Tel: +44 (0) 1229 840609

Product Selection Chart

							Lens types									Termination options				Body finish							
GENERIC OXLEY LAMP TYPE NUMBERS	Mounting Hole Dia. (mm)	Sealing Characteristics (1)	LED	Neon	Voltage (Integral Resistor)	Non-voltage	Sunlight viewable	Night Vision Goggle compatible	Fresnel Prominent	Fresnel Flat	Flat	Convex	Anti-Reflection Coating	EMI Shielding	Caption	LED lead terminations	Spills	Tags	Flying Leads	Black Anodised Finish	Chromate Finish	Nickel Plated	Aluminium	Plastic body	DESC 85122 Approved	DESC 87019 Approved XIR	Page Number
SSI/5/-	5.0	67	●			●	●				●					●	●	●	●	●		●					13
MI/5/-	5.0	67	●		●	●	●				●					●			●					●			14
OXL/MIL50/-	5.0	67	●		●	●	●	●			●		●	●		●		●	●	●	●	●	●				15
OXL/CLH/63/-	6.35	66	●		●	●				●						●	●	●	●	●			●				18
OXL/CLH/63/P/-	6.35	66	●		●	●			●							●	●	●	●	●			●				20
PS/LH/8/-	8.0	68	●			●	●	●			●	●	●	●	●	●			●				●		●		22
STR/LH/8/-	8.0	68	●		●	●	●	●			●	●	●	●	●		●	●	●	●	●		●		●	●	28
STR/5/LH/8/-	8.0	68	●			●	●	●			●		●				●		●	●							41
STR/501/LH/8/-	8.0	68	●		●	●	●	●			●		●				●		●	●							44
STR/NLH/-	8.0	68		●	●	●						●		●				●	●				●				39
OXL/CLH/80/-	8.0	67	●		●	●										●			●	●			●				46
STR/LH23/10/-	10.0	68	●		●	●						●	●				●	●	●	●			●				49
2STR/LH23/10/-	10.0	68	●			●	●	●			●		●				●		●	●			●				52
3STR/LH23/10/-	10.0	68	●			●	●	●			●		●				●		●	●			●				55
OXL/CLH/100/-	10.0	66	●		●	●	●			●						●	●	●	●	●			●				57
OXL/CLH/100/P/-	10.0	66	●		●	●	●		●							●	●	●	●	●			●				59

● **option is available**

Oxley Group Australia Pty Ltd
Email: sales@oxleygroup.com
Tel +61 (0) 2 9967 9488

Oxley Inc.
Email: sales@oxleyinc.com
Tel: +1 (203) 488 1033

Oxley Developments Company Ltd
Email: sales@oxley.co.uk
Tel:+44 (0) 1229 840609

(1) Panel Lamp Sealing

Various sealing options, denoted by IP ratings, are available for the different styles of lamps.

IP Ratings

The IP rating system provides a means of classifying the degrees of protection from dust, water and impact afforded by electrical equipment and enclosure. The system is recognised in most European countries and set out in BS EN 60529: 1992 Degrees of protection provided by enclosures (IP code).

First Number = Protection against solid objects

IP	TESTS
0	No protection.
1	Protected against solid objects up to 50 mm, e.g. accidental touch by hand.
2	Protected against solid objects up to 12 mm, e.g. fingers.
3	Protected against solid objects over 2.5 mm, (tools and wires).
4	Protected against solid objects over 1 mm, (tools, wires and small wires).
5	Protected against dust - limited ingress (no harmful deposit).
6	Total protected against dust.

Second Number = Protection against liquids

IP	TESTS
0	No protection.
1	Protected against vertically falling drops of water (e.g. condensation).
2	Protected against direct sprays of water up to 15° from the vertical.
3	Protected against direct sprays of water up to 60° from the vertical.
4	Protected against water sprayed from all directions - limited ingress permitted.
5	Protected against low pressure jets of water from all directions - limited ingress permitted.
6	Protected against strong jets of water, e.g. for use on ships decks - limited ingress permitted
7	Protected against the effects of temporary immersion between 15 cm and 1 m. Duration of test 30 minutes.
8	Protected against long periods of immersion under pressure.

Note: All LED Indicator Lamps range from IP66 to IP68

Oxley Developments Company Ltd
Email: sales@oxley.co.uk
Tel: +44 (0) 1229 840609

Oxley Inc.
Email: sales@oxleyinc.com
Tel: +1 (203) 488 1033

Oxley Group Australia Pty Ltd
Email: sales@oxleygroup.com
Tel +61 (0) 2 9967 9488

www.oxleygroup.com/lamps
ODCSM40565/2/2005

Oxley Indicator Lamp Selection Chart (Descriptive Breakdown)

The selection chart on page 4 shows the major characteristics of Oxley indicator lamps.

For each generic lamp type the major characteristics of the basic lamp are indicated by an '●' in the appropriate column.

It is important to note that the list of lamps and options available is by no means exhaustive and many options not listed are available. Please consult factory for guidance on indicator lamps requiring a combination of options.

Sealing Characteristics

Please see Lamp Sealing chart on page 4.

Integral Resistor

The option of integral resistor eliminates the need for a current limiting resistor and therefore simplifies the external drive circuitry. Indicator lamps incorporating a current limiting resistor are identified by a colour coded sleeve on the cathode terminal. The table below displays the standard supply voltage indicator lamps available with colour codes used to identify the supply voltage.

Supply voltage (V dc)	Colour Code of bush
5	Blue
12	Yellow
15	Green
24	Brown
28	Violet
110	Black/Black
240	Blue/Black

Oxley Group Australia Pty Ltd
Email: sales@oxleygroup.com
Tel +61 (0) 2 9967 9488

Oxley Inc.
Email: sales@oxleyinc.com
Tel: +1 (203) 488 1033

Oxley Developments Company Ltd
Email: sales@oxley.co.uk
Tel: +44 (0) 1229 840609

The integral resistor limits the supply current to approximately 12 mA -15 mA at the specified supply voltage as standard. Integral resistors for different supply voltages and currents are available, but may be limited by the space inside the indicator lamp body to dissipate the power generated. (Please consult factory for details).

The majority of our Indicator Lamps are generally fitted with integral blocking diodes electrically connected in series with the LED. The blocking diode prevents the LED from being damaged through inadvertent connection to a reverse polarity supply. In addition to providing protection from reverse polarity connection the diode also provides half-wave rectification, which allows the lamp to be operated from AC supplies, providing the supply frequency is above 50 Hz to eliminate flicker.

Lens Characteristics

PLANO-CONVEX - Rear surface of lens flat - 'plano' - diffused and front of lens convex. Focal length of lens designed to increase the 'virtual image' of the light source, this in combination with the diffusion on the rear of lens increases the area of the light source and provides even illumination across the viewing aperture.

FRESNEL - Flat or convex lens with a series of concentric rings (grooves) cut into the rear surface of the lens. This provides the best of both worlds by attaining maximum on-axis brightness from the light source, viewed through clear portions of the lens, in between the concentric grooves and increasing the viewing angle of the indicator lamp by diffusing and refracting the light from the light source in the concentric rings. Due to the relatively small size and complexity of fresnel lenses used in Oxley indicator lamps these lenses are plastic injection moulded, in a variety of colours including clear to match the colour of the light source and the application. Coloured lenses viewed under conditions of high ambient light can cause spurious ON/OFF indications.

CAPTION - Character of suitable viewable engraved on rear surface of lens to provide indication of function, e.g. 'ON'.

DOMED - Domed lens. This lens provides 130° omni-directional viewing characteristics. Ideal for applications requiring wide angle visibility in low/high ambient light conditions where a high level of performance is required.

FLAT - CLEAR - used in applications where the indicator lamp is to be viewed under low ambient light conditions.

DIFFUSED - Light projected on to the rear diffused surface of the lens is 'spread out', improving the viewing angle and increasing the area of the viewed light source. Increases readability of indicator lamp under higher ambient light conditions; however, readability under sunlight conditions is compromised and improves the aesthetic appearance of the lamp, since the diffused surface on the rear of the lens provides a screen preventing direct viewing of the light source.

EMI Shielding
Special Electrostatic screen connected both electrically and mechanically between the light source and the lens. Shielding Efficiency – 20 dB reduction in electromagnetic radiation over the frequency range 5 MHz to 1 GHz when compared against a non-shielded device.

Oxley Group Australia Pty Ltd
Email: sales@oxleygroup.com
Tel +61 (0) 2 9967 9488

Oxley Inc.
Email: sales@oxleyinc.com
Tel: +1 (203) 488 1033

Oxley Developments Company Ltd
Email: sales@oxley.co.uk
Tel: +44 (0) 1229 840609

Sunlight Readable - Flat lens with light attenuating properties that are used to increase the 'ON/OFF', contrast ratio of the indicator lamp, therefore achieving greater sunlight readability. There is a common misconception that the brighter the light source the greater the sunlight readability of the indicator. Eliminating reflections and increasing the contrast ratio play the major part in achieving better sunlight readability.

The specially designed filters used in Oxley indicator lamps attenuate the ambient light passing through the lens, without affecting the colour of the light source. Any reflected light from the inner surfaces of the indicator lamp that may cause spurious ON / OFF indications is also attenuated, which produces the 'black hole' effect where reflected light is effectively quenched, thereby increasing the sunlight readability by increasing the contrast ratio. The above explains how a lamp with a lower luminous intensity can have better sunlight readability than a lamp with a higher luminous intensity.

ANTI-REFLECTION COATING - Coating vacuum deposited on to the front face of the lens designed to reduce reflections, therefore further enhancing the sunlight readability of the indicator lamp.

LENS MATERIAL - Material from which the lens is manufactured.

- **GLASS** - Used on the majority of Oxley indicator lamps due to precise control of optical properties and mechanical robustness. It also offers excellent resistance to temperature, thermal shock and solvents.
- **POLYCARBONATE** - Used for mechanically complex lenses, e.g. fresnel, that require injection moulding due to the complexity of the opto-mechanical design.

Terminals

PINS or SPILLS - Indicates lamp terminals.

TAGS - Generally more robust terminations featuring pins for insertion into PCBs, wire wraps or eyelets for ease of connecting hook-up wires.

FLYING LEADS - Available with colour coded wire for indication of polarity and different grades of wire, e.g. flame retardant, MIL-Spec etc. Incorporation of flying lead option generally indicated by addition of 'FLxx' into the part No., where 'xx' indicates the length of the flying lead in centimetres.

FLYING LEADS WITH CONNECTORS - For ease of assembly and reduced solder joints.

Oxley Group Australia Pty Ltd
Email: sales@oxleygroup.com
Tel +61 (0) 2 9967 9488

Oxley Inc.
Email: sales@oxleyinc.com
Tel: +1 (203) 488 1033

Oxley Developments Company Ltd
Email: sales@oxley.co.uk
Tel: +44 (0) 1229 840609

Secure XIR Lighting - Night Vision Goggle compatible

Used to describe an indicator lamp designed to meet the parameters specified by DESC control drawing No. 87019. The main purpose of DESC 87019 is to define secure lighting of equipment that is going into 'front-line' combat operations where standard indicator lamps could give away the position of the equipment and personnel to enemy forces.

Secure lighting is achieved by meeting two main parameters:

1. Restricting the viewing angle of visible light emitted from the indicator lamp. e.g. the operator must be standing directly in front of the equipment to see the light source.

2 Restricting the amount of energy emitted from the indicator lamp in the near infrared (NIR) region in the bandwidth of approximately 600 to 930nm. This is to eliminate detection by enemy forces using image intensifying system (NVGs).

NVG - Is the nomenclature used to describe an indicator lamp that is Night Vision Goggle compatible. For an indicator to be NVG compatible the amount of energy emitted in the near infrared (NIR) region must be restricted as described above for the XIR indicator lamps; however, unlike the XIR lamps there is no restriction other than the application on the viewing angle of the indicator lamp.

Night Vision Goggles produce an image by amplifying light in the NIR from 600 nm to 930 nm region of the spectrum. The NVGs have an Automatic Gain Control (AGC) which controls the amplification of the NIR. As NIR levels illuminating a scene increase to maintain the contrast of the image being presented to the user, the AGC reduces the level of amplification. As NIR levels reduce the AGC increases the amplification to maintain the image. The effect of stray NIR, for example, light from an indicator lamp on a control panel close to the user of NVGs, is for the amplification of the NVGs to be reduced thereby blinding the goggles; this is particularly critical for aerospace cockpit applications.

The restriction of the NIR spectrum is achieved by vacuum deposition of special materials with differing refractive indices on to the rear surface of the lens. To form the NIR blocking filter up to 60 alternate layers of two different materials are vacuum deposited onto the lens.

DESC 85122 APPROVED - Indicates styles of indicator lamps which can be approved against DESC control drawing 85122.

Indicator lamps approved against DESC 85122 are 100% screened against the following test schedule:

High Temperature Storage - at 100°C, duration 72 hours minimum.

Thermal Shock:
- high = 100°C
- low = -55°C

10 cycles duration at each temperature, 15 minutes minimum.

Oxley Group Australia Pty Ltd
Email: sales@oxleygroup.com
Tel +61 (0) 2 9967 9488

Oxley Inc.
Email: sales@oxleyinc.com
Tel: +1 (203) 488 1033

Oxley Developments Company Ltd
Email: sales@oxley.co.uk
Tel: +44 (0) 1229 840609

Constant Acceleration: 20,000 g.

Seal test: immersion per MIL- STD-750, test method 1011 condition A.

Pre Burn-in Measurements:

- Luminous Intensity (Iv)
- Forward Voltage (Vf)
- Reverse Current (Ir)
- Burn-In - (Forward bias) at ambient temperature. 168 hours minimum duration.

Post Burn-in Measurements:

- Iv (A Iv, 20% max. from initial value).
- Vf (A Vf ± 50 mV from initial value).
- Ir

Insulation Resistance >1,000 M at 500 V between both terminations and body.

Mechanical Inspection - Additional maintenance testing is carried out against sampling plan to ensure compliance with the specification.

DESC 87019 APPROVED - Indicates styles of indicator lamps which can be approved against DESC control drawing 87019.

Testing generally as specified for DESC 85122 with the addition of total power emission measurements between 350 nm and 930 nm.

DESC - GENERAL - Only indicator lamps that are specified on the DESC control drawing can be formally released against the drawing. However other styles of indicator lamps can be certified as meeting the screening and general requirements of the DESC drawing. (Please consult factory for details).

Oxley Group Australia Pty Ltd
Email: sales@oxleygroup.com
Tel +61 (0) 2 9967 9488

Oxley Inc.
Email: sales@oxleyinc.com
Tel: +1 (203) 488 1033

Oxley Developments Company Ltd
Email: sales@oxley.co.uk
Tel: +44 (0) 1229 840609

Sub-Miniature Cone Lock Indicator Lamp

Single Chip LED

Push Fit - metal body

IP67 - Ø5.0

Features

- Low profile
- Self sealing indicator sealed to IP67
- For high density applications
- Fast, easy push fit mounting
- Optional black anodised body
- Coloured lens
- 80° Viewing angle
- Operating Temp -40 to 85°
- Storage Temp -40 to 85°

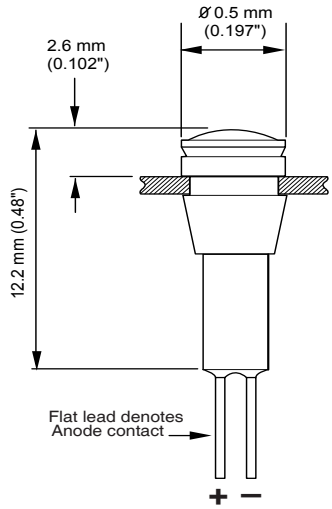

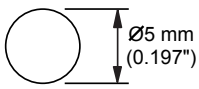

Mounting Hole SSI/5

Ordering Information and Technical Characteristics

Ordering Information	Colour	Forward Voltage (V)	Current (ma)	Luminous Intensity (mcd)	Reverse Voltage (V)
SSI/5/RD	Red	2.1	20	1	5
SSI/5/AR	Amber	2.1	20	1.5	5
SSI/5/GN	Green	2.1	20	1.5	5
SSI/5/AlGaAsRD	Red	2.1	20	1200	5
SSI/5/H/AR	Amber	2.1	20	1000	5
SSI/5/H/GN	Green	3.6	20	1250	5
SSI/5/REF1/RD	Red	2.1	20	1	5
SSI/5/REF1/AR	Amber	2.1	20	1.5	5
SSI/5/REF1/GN	Green	2.1	20	1.5	5
SSI/5/REF1/AlGaAsRD	Red	2.1	20	1200	5
SSI/5/REF1/H/AR	Amber	2.1	20	1000	5
SSI/5/REF1/H/GN	Green	3.6	20	1250	5

Mean time before failure 90,000 hrs

1) For optional black anodised body include BB within the type number. e.g. SSI/BB/5/-

2) REF1 denotes tag terminals

Oxley Group Australia Pty Ltd
Email: sales@oxleygroup.com
Tel +61 (0) 2 9967 9488

Oxley Inc.
Email: sales@oxleyinc.com
Tel: +1 (203) 488 1033

Oxley Developments Company Ltd
Email: sales@oxley.co.uk
Tel: +44 (0)1229 840609

Sub-Miniature Cone Lock Indicator Lamp

Push Fit - moulded plastic body

Single Chip LED

IP67 - Ø5.0

Features

- Low profile
- Self sealing indicator sealed to IP67
- For high density applications
- Fast, easy push fit mounting
- Optional black anodised body
- Coloured lens
- 80° Viewing angle
- Operating Temp -40 to 85°
- Storage Temp -40 to 85°

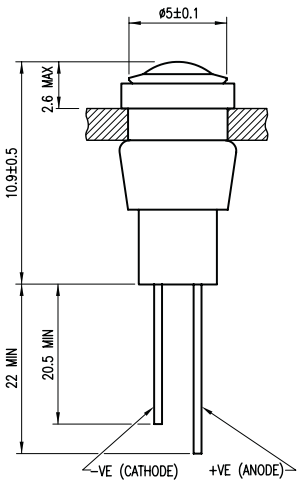

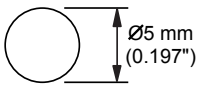

Mounting Hole MI/5/-

Ordering Information and Technical Characteristics

Ordering Information	Colour	Forward Voltage (V)	Current (ma)	Luminous Intensity (mcd)	Reverse Voltage (V)
MI/5/RD	Red	2.1	20	1	5
MI/5/YW	Yellow	2.1	20	1.5	5
MI/5/GN	Green	2.1	20	1.5	5
MI/5/AL	AlGaAs Red	1.9	20	1200	5
MI/5/H/YW	Yellow	2.1	20	1000	5
MI/5/H/GN	Green	3.6	20	1250	5
MI/5/H/BE	Blue	3.6	20	1200	5
MI/5/H/WE	White	3.6	20	1000	5

Mean time before failure 90,000 hrs

1) Voltage variants available on request ranging from 5Vdc to 28 Vdc

2) Flying lead terminations available on request.

Oxley Developments Company Ltd
Email: sales@oxley.co.uk
Tel: +44 (0)1229 582621

Oxley Inc.
Email: sales@oxleyinc.com
Tel: +1 (203) 488 1033

Oxley Group Australia Pty Ltd
Email: sales@oxleygroup.com
Tel +61 (0) 2 9967 9488

www.oxleygroup.com/lamps
ODCSM40565/2/2005

Sub-Miniature Single Chip LED

Flat Lens IP67 - Ø5.0

Features

- Rugged glass and metal construction
- Sealed top and rear to IP67
- Ideal where panel space is at a premium
- Black anodised bezel for harsh environment
- Clear flat diffused lens
- 60° Viewing angle
- Operating temp -40 to 85°C
- Storage temp -55 to 100°C

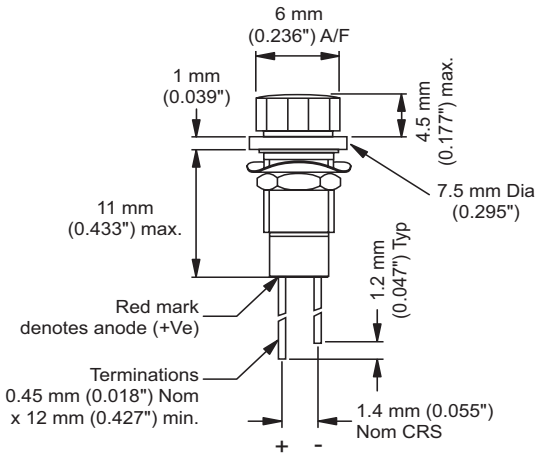

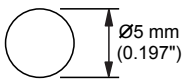

Mounting Hole
(OXL/MIL50/- or OXL/MIL50/SES/-)

Ordering Information and Technical Characteristics

Ordering Information	Colour	Forward Voltage (V)	Current (mA)	Luminous Intensity (mcd)	Reverse Voltage (V)
OXL/MIL50/RD	Red	2.2	20	20	5
OXL/MIL50/YW	Yellow	2.2	20	20	5
OXL/MIL50/GN	Green	2.2	20	20	5
OXL/MIL50/AlGaAsRD	Red	1.9	20	1200	5
OXL/MIL50/H/YW	Yellow	2.2	20	1000	5
OXL/MIL50/H/GN	Green	3.6	20	1250	5
OXL/MIL50/H/BE	Blue	3.6	20	1200	5
OXL/MIL50/H/WE	White	3.6	20	1000	5
OXL/MIL50/SES/RD	Red	2.2	20	20	5
OXL/MIL50/SES/YW	Yellow	2.2	20	20	5
OXL/MIL50/SES/GN	Green	2.2	20	20	5
OXL/MIL50/SES/H/AlGaAsRD	Red	1.9	20	1200	5
OXL/MIL50/SES/H/YW	Yellow	2.2	20	1000	5
OXL/MIL50/SES/H/GN	Green	3.6	20	1250	5
OXL/MIL50/SES/H/BE	Blue	3.6	20	1200	5
OXL/MIL50/SES/H/WE	White	3.6	20	1000	5

Mean time before failure 90,000 hrs

1) For Night Vision Goggle compatible options please add **RAF/NVG** to the end of the order information.
e.g. OXL/MIL50/RAF/NVG plus 10 - Green, 20 - Yellow or 30 - Red (RAF denotes sunlight readability)

2) Flying lead terminations available on request.

Oxley Group Australia Pty Ltd
Email: sales@oxleygroup.com
Tel +61 (0) 2 9967 9488

Oxley Inc.
Email: sales@oxleyinc.com
Tel: +1 (203) 488 1033

Oxley Developments Company Ltd
Email: sales@oxley.co.uk
Tel: +44 (0)1229 840609

Sub-Miniature Sunlight Viewable Flat Lens

Single Chip LED IP67 - Ø5.0

Features

- Rugged glass and metal construction
- Sealed top and rear to IP67
- Ideal where panel space is at a premium
- Black anodised bezel for good on/off contrast ratio
- Ideal for hazardous environments
- Flat neutral density lens
- 60° Viewing angle
- Operating temp -40 to 85°C
- Storage temp -55 to 100°C

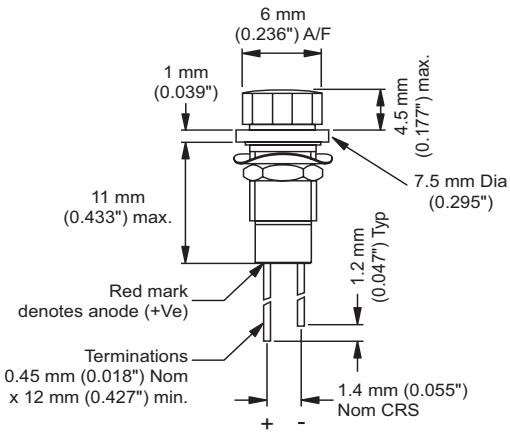

Mounting Hole
(OXL/MIL50/- or OXL/MIL50/SES/-)

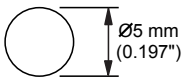

Ordering Information and Technical Characteristics

Ordering Information	Colour	Lens Type	Forward Voltage (V)	Current (mA)	Luminous Intensity (mcd)	Reverse Voltage (V)
OXL/MIL50/RAF/RD	Red	Flat Neutral Density Lens	2.2	20	20	5
OXL/MIL50/RAF/YW	Yellow		2.2	20	20	5
OXL/MIL50/RAF/GN	Green		2.3	20	20	5
OXL/MIL50/RAF/AlGaAsRD	Red		1.9	20	1200	5
OXL/MIL50/RAF/H/YW	Yellow		2.2	20	1000	5
OXL/MIL50/RAF/H/GN	Green		3.6	20	1250	5
OXL/MIL50/RAF/H/BE	Blue		3.6	20	1200	5
OXL/MIL50/RAF/H/WE	White		3.6	20	1000	5
OXL/MIL50/RAF/SES/RD	Red		2.2	20	20	5
OXL/MIL50/RAF/SES/YW	Yellow		2.2	20	20	5
OXL/MIL50/RAF/SES/GN	Green		2.2	20	20	5
OXL/MIL50/RAF/SES/AlGaAsRD	Red		1.9	20	1200	5
OXL/MIL50/RAF/SES/H/YW	Yellow		2.2	20	1000	5
OXL/MIL50/RAF/SES/H/GN	Green		3.6	20	1250	5
OXL/MIL50/RAF/SES/H/BE	Blue		3.6	20	1200	5
OXL/MIL50/RAF/SES/H/WE	White		3.6	20	1000	5

Mean time before failure 90,000 hrs

1) For night vision goggle compatible options please add **RAF/NVG** to the end of the order information. e.g. OXL/MIL50/RAF/NVG - 10 - Green, 20 - Yellow and 30 - Red.
2) **RAF** - denotes sunlight readability
3) Flying lead terminations available on request - add **FLXX**, where XX = length of leads in cm to Part Number.
4) EMI Shielding option available, please add **SES** to part number (note: lamps shroud dimensions **Ø**7.5mm, 5.5mm high - not shown above)

Oxley Developments Company Ltd
Email: sales@oxley.co.uk
Tel: +44 (0)1229 840609

Oxley Inc.
Email: sales@oxleyinc.com
Tel: +1 (203) 488 1033

Oxley Group Australia Pty Ltd
Email: sales@oxleygroup.com
Tel +61 (0) 2 9967 9488

www.oxleygroup.com/lamps
ODCSM40565/2/2005

Voltage Sub-Miniature Single Chip LED

Flat Lens IP67 - Ø5.0

Features

- Rugged glass and metal construction
- Sealed top and rear to IP67
- Ideal where panel space is at a premium
- Black anodised bezel for harsh environment
- Flat diffused lens
- 60° Viewing angle
- Operating temp -40 to 85°C
- Storage temp -55 to 100°C

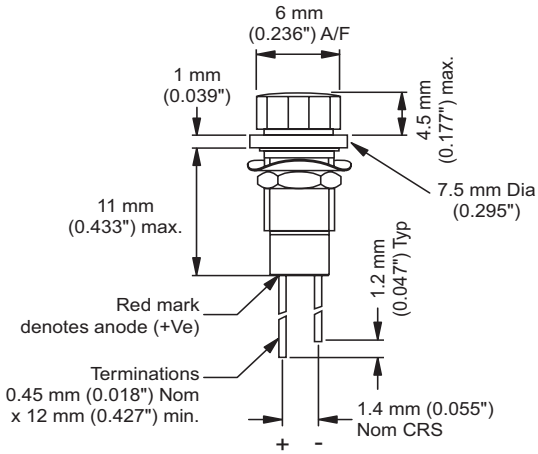

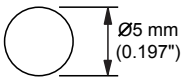

Mounting Hole
(OXL/MIL50/- or OXL/MIL50/SES/-)

Ordering Information and Technical Characteristics

Ordering Information	Colour	Forward Voltage (V)	Current (mA)	Luminous Intensity (mcd)	Reverse Voltage (V)
OXL/MIL50/5/RD	Red	5	15	15	5
OXL/MIL50/5/YW	Yellow	5	15	15	5
OXL/MIL50/5/GN	Green	5	15	15	5
OXL/MIL50/5/AlGaAsRD	Red	5	15	900	5
OXL/MIL50/5/H/YW	Yellow	5	15	750	5
OXL/MIL50/5/H/GN	Green	5	15	940	5
OXL/MIL50/5/H/BE	Blue	5	15	900	5
OXL/MIL50/5/H/WE	White	5	15	750	5
OXL/MIL50/12/RD	Red	12	15	15	12
OXL/MIL50/12/YW	Yellow	12	15	15	12
OXL/MIL50/12/GN	Green	12	15	15	12
OXL/MIL50/12/AlGaAsRD	Red	12	15	900	12
OXL/MIL50/12/H/YW	Yellow	12	15	750	12
OXL/MIL50/12/H/GN	Green	12	15	940	12
OXL/MIL50/12/H/BE	Blue	12	15	900	12
OXL/MIL50/12/H/WE	White	12	15	750	12

Continued...

Oxley Group Australia Pty Ltd
Email: sales@oxleygroup.com
Tel +61 (0) 2 9967 9488

Oxley Inc.
Email: sales@oxleyinc.com
Tel: +1 (203) 488 1033

Oxley Developments Company Ltd
Email: sales@oxley.co.uk
Tel: +44 (0)1229 840609

Ordering Information	Colour	Forward Voltage (V)	Current (mA)	Luminous Intensity (mcd)	Reverse Voltage (V)
OXL/MIL50/15/RD	Red	15	15	15	15
OXL/MIL50/15/YW	Yellow	15	15	15	15
OXL/MIL50/15/GN	Green	15	15	15	15
OXL/MIL50/15/AlGaAsRD	Red	15	15	900	15
OXL/MIL50/15/H/YW	Yellow	15	15	750	15
OXL/MIL50/15/H/GN	Green	15	15	940	15
OXL/MIL50/15/H/BE	Blue	15	15	900	15
OXL/MIL50/15/H/WE	White	15	15	750	15
OXL/MIL50/24/RD	Red	24	15	15	24
OXL/MIL50/24/YW	Yellow	24	15	15	24
OXL/MIL50/24/GN	Green	24	15	15	24
OXL/MIL50/24/AlGaAsRD	Red	24	15	900	24
OXL/MIL50/24/H/YW	Yellow	24	15	750	24
OXL/MIL50/24/H/GN	Green	24	15	940	24
OXL/MIL50/24/H/BE	Blue	24	15	900	24
OXL/MIL50/24/H/WE	White	24	15	750	24
OXL/MIL50/28/RD	Red	28	15	15	28
OXL/MIL50/28/YW	Yellow	28	15	15	28
OXL/MIL50/28/GN	Green	28	15	15	28
OXL/MIL50/28/AlGaAsRD	Red	28	15	900	28
OXL/MIL50/28/H/YW	Yellow	28	15	750	28
OXL/MIL50/28/H/GN	Green	28	15	940	28
OXL/MIL50/28/H/BE	Blue	28	15	900	28
OXL/MIL50/28/H/WE	White	28	15	750	28

Mean time before failure 90,000 hrs

1) For night vision goggle compatible options please add **RAF/NVG** to the end of the order information.
e.g. OXL/MIL50/28/RAF/NVG - 10 - Green, 20 - Yellow and 30 - Red

2) **RAF** - denotes sunlight readability

3) Flying lead terminations available on request - order FLXX, where XX = length of leads in cm

Oxley Developments Company Ltd
Email: sales@oxley.co.uk
Tel: +44 (0)1229 840609

Oxley Inc.
Email: sales@oxleyinc.com
Tel: +1 (203) 488 1033

Oxley Group Australia Pty Ltd
Email: sales@oxleygroup.com
Tel +61 (0) 2 9967 9488

www.oxleygroup.com/lamps
ODCSM40565/2/2005

Sub-Miniature

Flat Lens Two Part

Single Chip LED

IP67 - Ø5.0

Features

- 2 part construction permits wire-less detachment of front panels
- Rugged glass and metal construction
- Panel sealed to IP67
- Improved equipment reliability fewer solder joints
- Flat diffused lens
- 60° Viewing angle
- Operating temp -40 to 85°C
- Storage temp -55 to 100°C

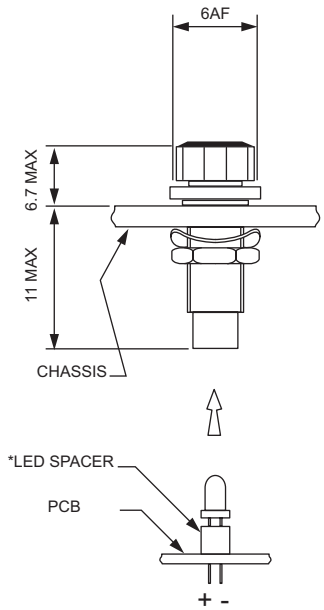

Note: LED spacer not supplied

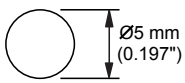

Mounting Hole OXL/MIL50/-

Ordering Information and Technical Characteristics

Ordering Information	Colour	Forward Voltage (V)	Current (mA)	Luminous Intensity (mcd)	Reverse Voltage (V)
OXL/MIL50/LX/RD	Red	2.2	20	20	5
OXL/MIL50/LX/YW	Yellow	2.2	20	20	5
OXL/MIL50/LX/GN	Green	2.2	20	20	5
OXL/MIL50/LX/AlGaAsRD	Red	1.9	20	1200	5
OXL/MIL50/LX/H/YW	Yellow	2.2	20	1000	5
OXL/MIL50/LX/H/GN	Green	3.6	20	1250	5
OXL/MIL50/LX/H/BE	Blue	3.6	20	1200	5
OXL/MIL50/LX/H/WE	White	3.6	20	1000	5

Mean time before failure 90,000 hrs

1) For night vision goggle compatible options please add **RAF/NVG** to the end of the order information. e.g. OXL/MIL50/RAF/LX/NVG - 10 - Green, 20 - Yellow and 30 - Red.

2) **RAF** - denotes sunlight readability

3) EMI Shielding option available, please add **SES** to part number. (note: lamps shroud dimensions **Ø**7.5mm, 5.5mm high - not shown above)

Oxley Group Australia Pty Ltd
Email: sales@oxleygroup.com
Tel +61 (0) 2 9967 9488

Oxley Inc.
Email: sales@oxleyinc.com
Tel: +1 (203) 488 1033

Oxley Developments Company Ltd
Email: sales@oxley.co.uk
Tel: +44 (0)1229 840609

Low Profile and Flush Mounting Fresnel Lens

Single Chip LED IP66 - Ø6.35

Features

- Coloured low profile and prominent fresnel lens (Clear lens optional)
- Standard aluminium finish (black anodized optional)
- Ideal where panel space is at a premium
- Five voltage ranges as standard
- Reverse voltage protected
- 80° Viewing angle
- Operating temp -40 to 85°C
- Storage temp -40 to 85°C

Dimensions in mm (inches)

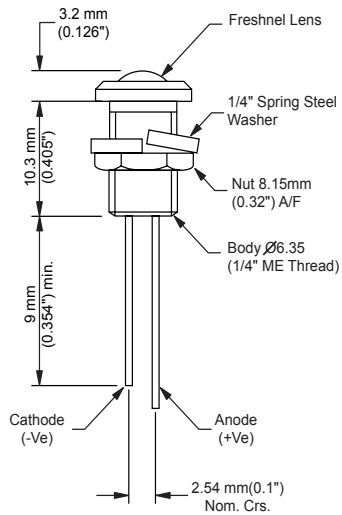

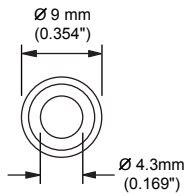

Front View

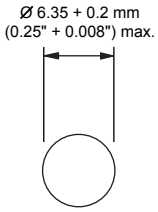

Mounting Hole

Ordering Information and Technical Characteristics

Ordering Information	Colour	Forward Voltage (V)	Current (mA)	Luminous Intensity (mcd)	Reverse Voltage (V)
OXL/CLH/63/RD	Red	2.2	20	45	5
OXL/CLH/63/YW	Yellow	2.2	20	45	5
OXL/CLH/63/GN	Green	2.2	20	45	5
OXL/CLH/63/AlGaAsRD	Red	1.9	20	1250	5
OXL/CLH/63/H/YW	Yellow	2.2	20	1000	5
OXL/CLH/63/H/GN	Green	3.6	20	1250	5
OXL/CLH/63/H/BE	Blue	3.6	20	1200	5
OXL/CLH/63/H/WE	White	3.6	20	1000	5

Continued...

Oxley Developments Company Ltd
Email: sales@oxley.co.uk
Tel: +44 (0)1229 840609

Oxley Inc.
Email: sales@oxleyinc.com
Tel: +1 (203) 488 1033

Oxley Group Australia Pty Ltd
Email: sales@oxleygroup.com
Tel +61 (0) 2 9967 9488

www.oxleygroup.com/lamps

ODCSM40565/2/2005

Ordering Information	Colour	Forward Voltage (V)	Current (mA)	Luminous Intensity (mcd)	Reverse Voltage (V)
OXL/CLH/63/5/RD	Red	5	15	35	5
OXL/CLH/63/5/YW	Yellow	5	15	35	5
OXL/CLH/63/5/GN	Green	5	15	35	5
OXL/CLH/63/5/AlGaAsRD	Red	5	15	900	5
OXL/CLH/63/5/H/YW	Yellow	5	15	750	5
OXL/CLH/63/5/H/GN	Green	5	15	940	5
OXL/CLH/63/5/H/BE	Blue	5	15	900	5
OXL/CLH/63/5/H/WE	White	5	15	750	5
OXL/CLH/63/12/RD	Red	12	15	35	12
OXL/CLH/63/12/YW	Yellow	12	15	35	12
OXL/CLH/63/12/GN	Green	12	15	35	12
OXL/CLH/63/12/AlGaAsRD	Red	12	15	900	12
OXL/CLH/63/12/H/YW	Yellow	12	15	750	12
OXL/CLH/63/12/H/GN	Green	12	15	940	12
OXL/CLH/63/12/H/BE	Blue	12	15	900	12
OXL/CLH/63/12/H/WE	White	12	15	750	12
OXL/CLH/63/24/RD	Red	24	15	35	24
OXL/CLH/63/24/YW	Yellow	24	15	35	24
OXL/CLH/63/24/GN	Green	24	15	35	24
OXL/CLH/63/24/AlGaAsRD	Red	24	15	900	24
OXL/CLH/63/24/H/YW	Yellow	24	15	750	24
OXL/CLH/63/24/H/GN	Green	24	15	940	24
OXL/CLH/63/24/H/BE	Blue	24	15	900	24
OXL/CLH/63/24/H/WE	White	24	15	750	24
OXL/CLH/63/28/RD	Red	28	15	35	28
OXL/CLH/63/28/YW	Yellow	28	15	35	28
OXL/CLH/63/28/GN	Green	28	15	35	28
OXL/CLH/63/28/AlGaAsRD	Red	28	15	900	28
OXL/CLH/63/28/H/YW	Yellow	28	15	750	28
OXL/CLH/63/28/H/GN	Green	28	15	940	28
OXL/CLH/63/28/H/BE	Blue	28	15	900	28
OXL/CLH/63/28/H/WE	White	28	15	750	28

Mean time before failure 90,000 hrs

1) Clear lens and black anodised bodies available on request - denoted by **CL** and **BB** within the part number.
e.g. OXL/CLH/63/BB/28/CL/H/WE

2) Customer specials available on request.

Oxley Group Australia Pty Ltd
Email: sales@oxleygroup.com
Tel +61 (0) 2 9967 9488

Oxley Inc.
Email: sales@oxleyinc.com
Tel: +1 (203) 488 1033

Oxley Developments Company Ltd
Email: sales@oxley.co.uk
Tel: +44 (0)1229 840609

Type No. - OXL/CLH/63/P

Prominent Wide Viewing Fresnel Lens

Single Chip LED IP66 - Ø6.35

Features

- Coloured prominent Fresnel lens (Clear lens optional)
- Rugged metal body construction
- Aluminium body (black anodised optional)
- Ideal where panel space is at a premium.
- Five voltage ranges available as standard
- 100° Viewing angle
- Operating temp -40 to 85°C
- Storage temp -40 to 85°C

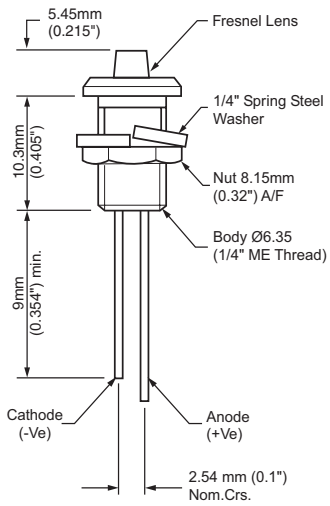

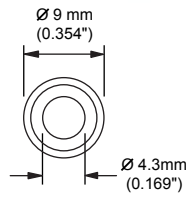

Front View

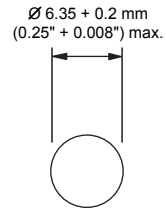

Mounting Hole

Ordering Information and Technical Characteristics

Ordering Information	Colour	Forward Voltage (V)	Current (mA)	Luminous Intensity (mcd)	Reverse Voltage (V)
OXL/CLH/63/P/RD	Red	2.2	20	45	5
OXL/CLH/63/P/YW	Yellow	2.2	20	45	5
OXL/CLH/63/P/GN	Green	2.2	20	45	5
OXL/CLH/63/P/AlGaAsRD	Red	1.9	20	1200	5
OXL/CLH/63/P/H/YW	Yellow	2.2	20	1000	5
OXL/CLH/63/P/H/GN	Green	3.6	20	1250	5
OXL/CLH/63/P/H/BE	Blue	3.6	20	1200	5
OXL/CLH/63/P/H/WE	White	3.6	20	1000	5
OXL/CLH/63/5/P/RD	Red	5	15	35	5
OXL/CLH/63/5/P/YW	Yellow	5	15	35	5
OXL/CLH/63/5/P/GN	Green	5	15	35	5
OXL/CLH/63/5/P/AlGaAsRD	Red	5	15	900	5
OXL/CLH/63/5/P/H/YW	Yellow	5	15	750	5
OXL/CLH/63/5/P/H/GN	Green	5	15	940	5

Continued ..

Oxley Developments Company Ltd
Email: sales@oxley.co.uk
Tel: +44 (0)1229 840609

Oxley Inc.
Email: sales@oxleyinc.com
Tel: +1 (203) 488 1033

Oxley Group Australia Pty Ltd
Email: sales@oxleygroup.com
Tel +61 (0) 2 9967 9488

www.oxleygroup.com/lamps
ODCSM40565/2/2005

Ordering Information	Colour	Forward Voltage (V)	Current (mA)	Luminous Intensity (mcd)	Reverse Voltage (V)
OXL/CLH/63/5/P/H/BE	Blue	5	15	900	5
OXL/CLH/63/5/P/H/WE	White	5	15	750	5
OXL/CLH/63/12/P/RD	Red	12	15	35	12
OXL/CLH/63/12/P/YW	Yellow	12	15	35	12
OXL/CLH/63/12/P/GN	Green	12	15	35	12
OXL/CLH/63/12/P/AlGaAsRD	Red	12	15	900	12
OXL/CLH/63/12/P/H/YW	Yellow	12	15	750	12
OXL/CLH/63/12/P/H/GN	Green	12	15	940	12
OXL/CLH/63/12/P/H/BE	Blue	12	15	900	12
OXL/CLH/63/12/P/H/WE	White	12	15	750	12
OXL/CLH/63/15/P/RD	Red	15	15	35	15
OXL/CLH/63/15/P/YW	Yellow	15	15	35	15
OXL/CLH/63/15/P/GN	Green	15	15	35	15
OXL/CLH/63/15/P/AlGaAsRD	Red	15	15	900	15
OXL/CLH/63/15/P/H/YW	Yellow	15	15	750	15
OXL/CLH/63/15/P/H/GN	Green	15	15	940	15
OXL/CLH/63/15/P/H/BE	Blue	15	15	900	15
OXL/CLH/63/15/P/H/WE	White	15	15	750	15
OXL/CLH/63/24/P/RD	Red	24	15	35	24
OXL/CLH/63/24/P/YW	Yellow	24	15	35	24
OXL/CLH/63/24/P/GN	Green	24	15	35	24
OXL/CLH/63/24/P/AlGaAsRD	Red	24	15	900	24
OXL/CLH/63/24/P/H/YW	Yellow	24	15	750	24
OXL/CLH/63/24/P/H/GN	Green	24	15	940	24
OXL/CLH/63/24/P/H/BE	Blue	24	15	900	24
OXL/CLH/63/24/P/H/WE	White	24	15	750	24
OXL/CLH/63/28/P/RD	Red	28	15	35	28
OXL/CLH/63/28/P/YW	Yellow	28	15	35	28
OXL/CLH/63/28/P/GN	Green	28	15	35	28
OXL/CLH/63/28/P/AlGaAsRD	Red	28	15	900	28
OXL/CLH/63/28/P/H/YW	Yellow	28	15	750	28
OXL/CLH/63/28/P/H/GN	Green	28	15	940	28
OXL/CLH/63/28/P/H/BE	Blue	28	15	900	28
OXL/CLH/63/28/P/H/WE	White	28	15	750	28

1) Coloured lens as standard, optional clear lens available - denoted by **CL** in part numbering.
e.g. OXL/CLH/63/P/CL/GN

2) Black anodised body available - denoted by BB in part number eg. OXL/CLH/63/BB/P/CL/GN

3) Customer specials available on request.

Oxley Group Australia Pty Ltd
Email: sales@oxleygroup.com
Tel +61 (0) 2 9967 9488

Oxley Inc.
Email: sales@oxleyinc.com
Tel: +1 (203) 488 1033

Oxley Developments Company Ltd
Email: sales@oxley.co.uk
Tel: +44 (0)1229 840609

Panel Sealed Convex Lens

Single Chip LED IP68 - Ø8.0

Features

- Rugged glass and metal construction
- Short body length - ideal for applications where space is critical behind panel
- Panel sealed to IP68
- High intensity options available in all colours including blue and white
- Clear diffused lens
- 60° Viewing angle
- Operating temp -40 to 85°C
- Storage temp -55 to 100°C

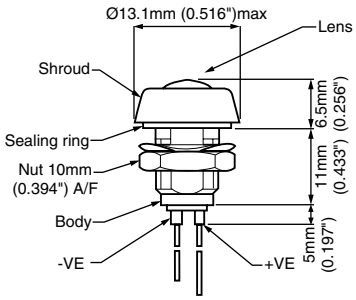

Terminations 14 mm (0.551") to 200 mm (0.787") long

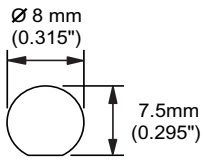

Mounting Hole

Ordering Information and Technical Characteristics

Ordering Information	Colour	Forward Voltage (V)	Current (mA)	Luminous Intensity (mcd)	Reverse Voltage (V)
PS/LH/8/RD	Red	2.2	20	50	5
PS/LH/8/YW	Yellow	2.2	20	40	5
PS/LH/8/GN	Green	2.2	20	50	5
PS/LH/8/AlGaAsRD	Red	1.9	20	1200	5
PS/LH/8/H/YW	Yellow	2.2	20	1000	5
PS/LH/8/H/GN	Green	3.6	20	1250	5
PS/LH/8/H/BE	Blue	3.6	20	1200	5
PS/LH/8/H/WE	White	3.6	20	1000	5

Low Current Range

Ordering Information	Colour	Forward Voltage (V)	Current (mA)	Luminous Intensity (mcd)	Reverse Voltage (V)
PS/LH/8/LC/RD	Red	1.8	2.0	2.0	5
PS/LH/8/LC/YW	Yellow	1.9	2.0	2.0	5
PS/LH/8/LC/GN	Green	1.9	2.0	3.0	5

Mean time before failure 90,000 hrs. Low current (LC) models 200,000 hrs

1) Customer specials available on request.

Oxley Developments Company Ltd
Email: sales@oxley.co.uk
Tel: +44 (0)1229 840609

Oxley Inc.
Email: sales@oxleyinc.com
Tel: +1 (203) 488 1033

Oxley Group Australia Pty Ltd
Email: sales@oxleygroup.com
Tel +61 (0) 2 9967 9488

www.oxleygroup.com/lamps
ODCSM40565/2/2005

Panel Sealed

Domed Lens

Single Chip LED

IP68 - Ø8.0

Features

- Rugged glass and metal construction
- Short body length - ideal for applications where space is critical behind panel
- Panel sealed to IP68
- High intensity options available in all colours including blue and white
- Clear diffused lens
- 100° Viewing angle
- Operating temp -40 to 85°C
- Storage temp -55 to 100°C

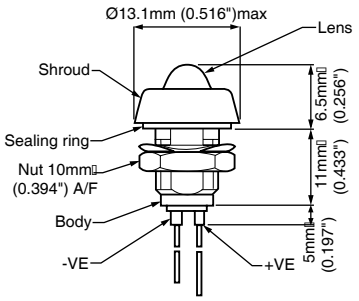

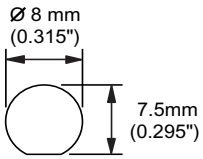

Mounting Hole

Ordering Information and Technical Characteristics

Ordering Information	Colour	Forward Voltage (V)	Current (mA)	Luminous Intensity (mcd)	Reverse Voltage (V)
PS/LH/8/DOM/RD	Red	2.2	20	50	5
PS/LH/8/DOM/YW	Yellow	2.2	20	40	5
PS/LH/8/DOM/GN	Green	2.2	20	50	5
PS/LH/8/DOM/AlGaAsRD	Red	1.9	20	1200	5
PS/LH/8/DOM/H/YW	Yellow	2.2	20	1000	5
PS/LH/8/DOM/H/GN	Green	3.6	20	1250	5
PS/LH/8/DOM/H/BE	Blue	3.6	20	1200	5
PS/LH/8/DOM/H/WE	White	3.6	20	1000	5

Low Current Range

Ordering Information	Colour	Forward Voltage (V)	Current (mA)	Luminous Intensity (mcd)	Reverse Voltage (V)
PS/LH/8/LC/DOM/RD	Red	1.8	2.0	2.0	5
PS/LH/8/LC/DOM/YW	Yellow	1.9	2.0	3.0	5
PS/LH/8/LC/DOM/GN	Green	1.9	2.0	2.0	5

Mean time before failure 90,000 hrs. Low current (LC) models 200,000 hrs

1) Customer specials available on request.

Oxley Group Australia Pty Ltd
Email: sales@oxleygroup.com
Tel +61 (0) 2 9967 9488

Oxley Inc.
Email: sales@oxleyinc.com
Tel: +1 (203) 488 1033

Oxley Developments Company Ltd
Email: sales@oxley.co.uk
Tel: +44 (0)1229 840609

Panel Sealed - Caption Indicator

Convex Lens

Single Chip LED

IP68 - Ø8.0

Features

- Rugged glass and metal construction
- Short body length - ideal for applications where space is critical behind panel
- Caption hidden until lit
- Custom captions available to order
- Panel sealed to IP68
- Clear diffused lens
- 60° Viewing angle
- Operating temp -40 to 85°C
- Storage temp -55 to 100°C

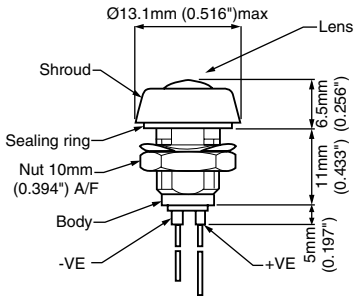

Terminations 14 mm (0.551") to 200 mm (0.787") long

(number shown for illustration purpose only)

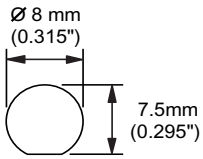

Mounting Hole

Ordering Information and Technical Characteristics

Ordering Information	Colour	Forward Voltage (V)	Current (mA)	Luminous Intensity (mcd)	Reverse Voltage (V)
PS/LH/8/CAPT/RD	Red	2.2	20	50	5
PS/LH/8/CAPT/YW	Yellow	2.2	20	40	5
PS/LH/8/CAPT/GN	Green	2.2	20	50	5
PS/LH/8/CAPT/AlGaAsRD	Red	1.9	20	1200	5
PS/LH/8/CAPT/H/YW	Yellow	2.2	20	1000	5
PS/LH/8/CAPT/H/GN	Green	3.6	20	1250	5
PS/LH/8/CAPT/H/BE	Blue	3.6	20	1200	5
PS/LH/8/CAPT/H/WE	White	3.6	20	1000	5

Mean time before failure 90,000 hrs.

1) Customer specials available on request.

Oxley Developments Company Ltd
Email: sales@oxley.co.uk
Tel: +44 (0)1229 840609

Oxley Inc.
Email: sales@oxleyinc.com
Tel: +1 (203) 488 1033

Oxley Group Australia Pty Ltd
Email: sales@oxleygroup.com
Tel +61 (0) 2 9967 9488

www.oxleygroup.com/lamps
ODCSM40565/2/2005

Panel Sealed

Sunlight Viewable

Single Chip LED

IP68 - Ø8.0

Features

- Rugged glass and metal construction
- Visible up to 100,000 LUX ambient illumination
- Special neutral density lens eliminates reflected sunlight
- Contrast enhancing shroud design
- Panel sealed to IP68
- 30° viewing angle
- Operating temp -40 to 85°C
- Storage temp -55 to 100°C

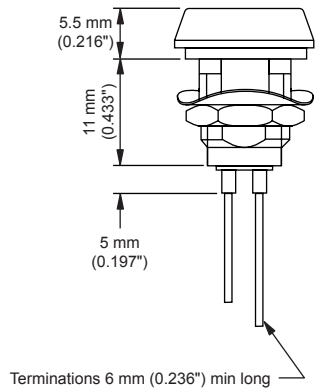

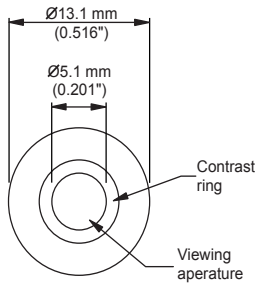

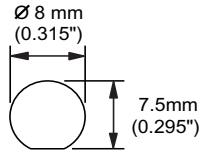

Mounting Hole

Ordering Information and Technical Characteristics (Ta = 25°C)

Ordering Information	Colour	Forward Voltage (V)	Current (mA)	Luminous Intensity (mcd)	Reverse Voltage (V)
PS/LH/8/RAF/RD	Red	2.2	20	15	5
PS/LH/8/RAF/YW	Yellow	2.2	20	12	5
PS/LH/8/RAF/GN	Green	2.2	20	15	5
PS/LH/8/RAF/AlGaAsRD	Red	1.9	20	360	5
PS/LH/8/RAF/H/YW	Yellow	3.6	20	375	5
PS/LH/8/RAF/H/GN	Green	2.2	20	300	5
PS/LH/8/RAF/H/BE	Blue	3.6	20	360	5
PS/LH/8/RAF/H/WE	White	3.6	20	300	5

Mean time before failure 90,000 hrs.

1) For night vision goggle compatible options please add **RAF/NVG** at the end of the ordering information. e.g. PS/LH/8/RAF/NVG - 10 = Green, 20 = Yellow and 30 = Red.

2) RAF - denotes sunlight viewable focused beam source (30°).

3) Flying lead terminations available on request - order FLXX, where XX = length of leads in cm

4) Customer Specials available on request.

Oxley Group Australia Pty Ltd
Email: sales@oxleygroup.com
Tel +61 (0) 2 9967 9488

Oxley Inc.
Email: sales@oxleyinc.com
Tel: +1 (203) 488 1033

Oxley Developments Company Ltd
Email: sales@oxley.co.uk
Tel: +44 (0)1229 840609

Panel Sealed

Sunlight Viewable

Single Chip LED

IP68 - Ø8.0

Features

- Rugged glass and metal construction;
- Visible up to 100,000 LUX ambient illumination
- Special neutral density lens eliminates reflected sunlight
- Contrast enhancing shroud design
- Panel sealed to IP68
- 100° viewing angle
- Operating temp -40 to 85°C
- Storage temp -55 to 100°C

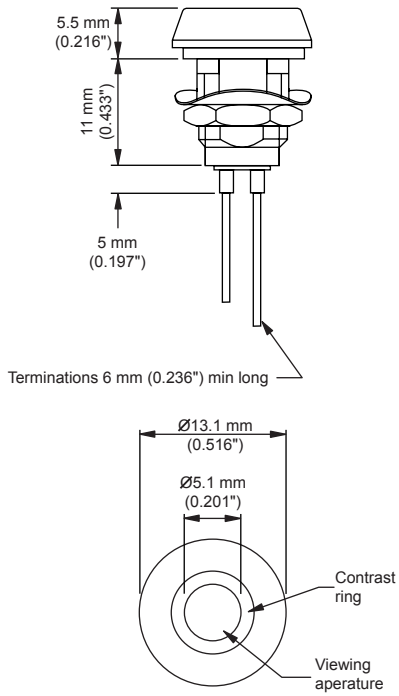

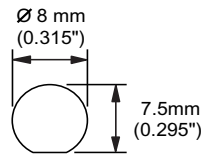

Mounting Hole

Ordering Information and Technical Characteristics

Ordering Information	Colour	Forward Voltage (V)	Current (mA)	Luminous Intensity (mcd)	Reverse Voltage (V)
PS/LH/8/RAPP/RD	Red	2.2	20	2	5
PS/LH/8/RAPP/YW	Yellow	2.2	20	1	5
PS/LH/8/RAPP/GN	Green	2.2	20	2	5
PS/LH/8/RAPP/AlGaAsRD	Red	1.9	20	54	5
PS/LH/8/RAPP/H/YW	Yellow	2.2	20	45	5
PS/LH/8/RAPP/H/GN	Green	3.6	20	56	5
PS/LH/8/RAPP/H/BE	Blue	3.6	20	54	5
PS/LH/8/RAPP/H/WE	White	3.6	20	45	5

Mean time before failure 90,000 hrs.

1) RAPP - denotes sunlight viewable pinpoint wide (100°) viewing angle.

2) For night vision goggle compatible options please add **RAPP/NVG** at the end of the ordering information. e.g. PS/LH/8/RAPP/NVG - 10 = Green, 20 = Yellow and 30 = Red.

3) Flying lead terminations available on request - order FLXX, where XX = length of leads in cm

4) Customer Specials available on request.

Oxley Developments Company Ltd
Email: sales@oxley.co.uk
Tel: +44 (0)1229 840609

Oxley Inc.
Email: sales@oxleyinc.com
Tel: +1 (203) 488 1033

Oxley Group Australia Pty Ltd
Email: sales@oxleygroup.com
Tel +61 (0) 2 9967 9488

www.oxleygroup.com/lamps
ODCSM40565/2/2005

Panel Sealed

Two-Part LED

Single Chip LED

IP68 - Ø8.0

Features

- 2 part construction permits wire-less detachment of front panel
- Rugged glass and metal construction
- Panel sealed to IP68
- Improved equipment reliability, improved solder joints
- Clear diffused lens
- 60° viewing angle.
- Operating temp -40 to 85°C
- Storage temp -55 to 100°C

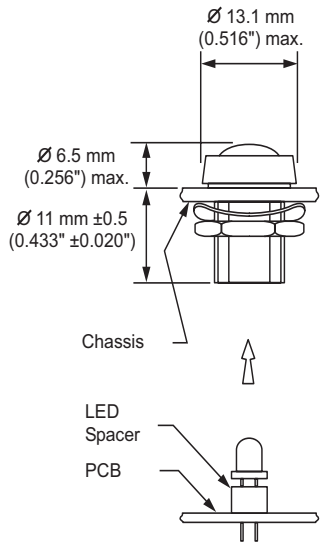

Note: LED spacer not supplied

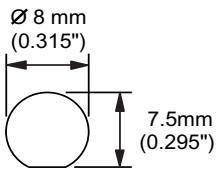

Mounting Hole

Ordering Information and Technical Characteristics

Ordering Information	Colour	Forward Voltage (V)	Current (mA)	Luminous Intensity (mcd)	Reverse Voltage (V)
PS/LH/8/LX/RD	Red	2.2	20	20	5
PS/LH/8/LX/YW	Yellow	2.2	20	20	5
PS/LH/8/LX/GN	Green	2.2	20	20	5
PS/LH/8/LX/AlGaAsRD	Red	1.9	20	1200	5
PS/LH/8/LX/H/YW	Yellow	2.2	20	1000	5
PS/LH/8/LX/H/GN	Green	3.6	20	1250	5
PS/LH/8/LX/H/BE	Blue	3.6	20	1200	5
PS/LH/8/LX/H/WE	White	3.6	20	1000	5

Mean time before failure 90,000 hrs.

1) For EMI shielded options please denote **SES** in the ordering information.
e.g. PS/LH/8/SES/LX/AlGaAsRD

2) Customer Specials available on request.

Oxley Group Australia Pty Ltd
Email: sales@oxleygroup.com
Tel +61 (0) 2 9967 9488

Oxley Inc.
Email: sales@oxleyinc.com
Tel: +1 (203) 488 1033

Oxley Developments Company Ltd
Email: sales@oxley.co.uk
Tel: +44 (0)1229 840609

Panel and Lamp Body Sealed Domed Lens

Single Chip LED IP68 - Ø8.0

Features

- Panel and lamp body sealed
- Rugged glass and metal construction;
- Five voltage ranges as standard
- Sealed to IP68
- High intensity options available in all colours including blue and white
- Reverse voltage protected
- Clear diffused lens
- 100° viewing angle
- Operating temp -40 to 85°C
- Storage temp -55 to 100°C

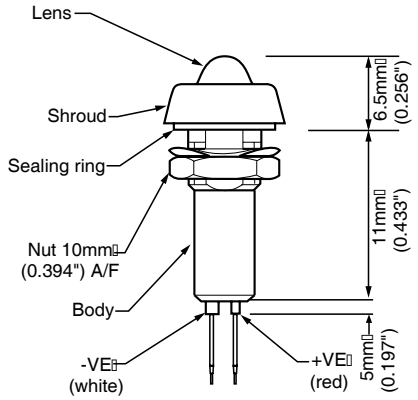

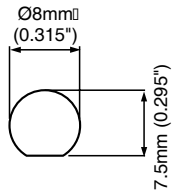

Mounting Hole

Ordering Information and Technical Characteristics

Ordering Information	Colour	Forward Voltage (V)	Current (mA)	Luminous Intensity (mcd)	Reverse Voltage (V)
STR/LH/8/DOM/RD	Red	2.2	20	50	5
STR/LH/8/DOM/YW	Yellow	2.2	20	40	5
STR/LH/8/DOM/GN	Green	2.2	20	50	5
STR/LH/8/5/DOM/RD	Red	5	15	38	5
STR/LH/8/5/DOM/YW	Yellow	5	15	30	5
STR/LH/8/5/DOM/GN	Green	5	15	38	5
STR/LH/8/12/DOM/RD	Red	12	15	38	12
STR/LH/8/12/DOM/YW	Yellow	12	15	30	12
STR/LH/8/12/DOM/GN	Green	12	15	38	12
STR/LH/8/24/DOM/RD	Red	24	15	38	24
STR/LH/8/24/DOM/YW	Yellow	24	15	30	24
STR/LH/8/24/DOM/GN	Green	24	15	38	24
STR/LH/8/28/DOM/RD	Red	28	15	38	28
STR/LH/8/28/DOM/YW	Yellow	28	15	30	28
STR/LH/8/28/DOM/GN	Green	28	15	38	28

Mean time before failure 90,000 hrs

1) Flying lead terminations available on request - order FLXX, where XX = length of leads in cm

2) Customer specials available on request.

Oxley Developments Company Ltd
Email: sales@oxley.co.uk
Tel: +44 (0)1229 840609

Oxley Inc.
Email: sales@oxleyinc.com
Tel: +1 (203) 488 1033

Oxley Group Australia Pty Ltd
Email: sales@oxleygroup.com
Tel +61 (0) 2 9967 9488

www.oxleygroup.com/lamps
ODCSM40565/2/2005

Panel and Lamp Body Sealed

Convex Lens

Single Chip LED

IP68 - Ø8.0

Features

- Panel and lamp body sealed
- Rugged glass and metal construction
- Five voltage ranges as standard
- Sealed to IP68
- Customer specified caption on all lamps
- Reverse voltage protected
- Clear diffused lens
- 60° viewing angle.
- Operating temp -40 to 85°C
- Storage temp -55 to 100°C

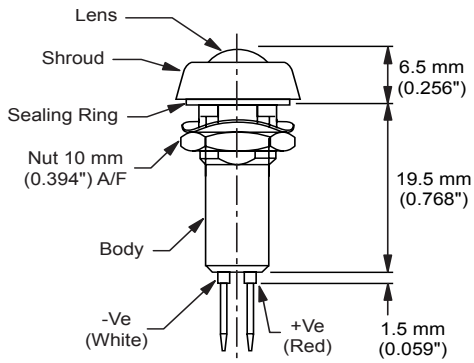

Terminations 8 mm (0.315") to 11 mm (0.433") long

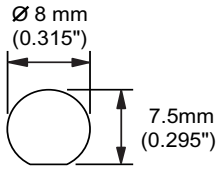

Mounting Hole

Ordering Information and Technical Characteristics

Ordering Information	Colour	Forward Voltage (V)	Current (mA)	Luminous Intensity (mcd)	Reverse Voltage (V)
STR/LH/8/RD	Red	2.2	20	50	5
STR/LH/8/YW	Yellow	2.2	20	40	5
STR/LH/8/GN	Green	2.2	20	50	5
STR/LH/8/AlGaAsRD	Red	1.9	20	1200	5
STR/LH/8/H/YW	Yellow	2.2	20	1000	5
STR/LH/8/H/GN	Green	3.6	20	1250	5
STR/LH/8/H/BE	Blue	3.6	20	1200	5
STR/LH/8/H/WE	White	3.6	20	1000	5
STR/LH/8/5/RD	Red	5	15	38	5
STR/LH/8/5/YW	Yellow	5	15	30	5
STR/LH/8/5/GN	Green	5	15	38	5
STR/LH/8/5/AlGaAsRD	Red	5	15	900	5
STR/LH/8/5/H/YW	Yellow	5	15	750	5
STR/LH/8/5/H/GN	Green	5	15	940	5
STR/LH/8/5/H/BE	Blue	5	15	900	5
STR/LH/8/5/H/WE	White	5	15	750	5

Continued...

Oxley Group Australia Pty Ltd
Email: sales@oxleygroup.com
Tel +61 (0) 2 9967 9488

Oxley Inc.
Email: sales@oxleyinc.com
Tel: +1 (203) 488 1033

Oxley Developments Company Ltd
Email: sales@oxley.co.uk
Tel: +44 (0)1229 840609

Ordering Information	Colour	Forward Voltage (V)	Current (mA)	Luminous Intensity (mcd)	Reverse Voltage (V)
STR/LH/8/12/RD	Red	12	15	38	12
STR/LH/8/12/YW	Yellow	12	15	30	12
STR/LH/8/12/GN	Green	12	15	38	12
STR/LH/8/12/AlGaAsRD	Red	12	15	900	12
STR/LH/8/12/H/YW	Yellow	12	15	750	12
STR/LH/8/12/H/GN	Green	12	15	940	12
STR/LH/8/12/H/BE	Blue	12	15	900	12
STR/LH/8/12/H/WE	White	12	15	750	12
STR/LH/8/24/RD	Red	24	15	38	24
STR/LH/8/24/YW	Yellow	24	15	30	24
STR/LH/8/24/GN	Green	24	15	38	24
STR/LH/8/24/AlGaAsRD	Red	24	15	900	24
STR/LH/8/24/H/YW	Yellow	24	15	750	24
STR/LH/8/24/H/GN	Green	24	15	940	24
STR/LH/8/24/H/BE	Blue	24	15	900	24
STR/LH/8/24/H/WE	White	24	15	750	24
STR/LH/8/28/RD	Red	28	15	38	28
STR/LH/8/28/YW	Yellow	28	15	30	28
STR/LH/8/28/GN	Green	28	15	38	28
STR/LH/8/28/AlGaAsRD	Red	28	15	900	28
STR/LH/8/28/H/YW	Yellow	28	15	750	28
STR/LH/8/28/H/GN	Green	28	15	940	28
STR/LH/8/28/H/BE	Blue	28	15	900	28
STR/LH/8/28/H/WE	White	28	15	750	28

Mean time before failure 90,000 hrs.

1) For night vision goggle compatible options please add **NVG** to the end of the part number.
e.g. STR/LH/8/28/**RAF/NVG** or STR/LH/8/28/**RAPP/NVG** - 10 - Green, 20 - Yellow and 30 - Red
RAF - denotes sunlight readability

3) Flying lead terminations available on request - order FLXX, where XX = length of leads in cm

4) EMI Shielding option available - please add SES in the part number e.g. STR/LH/8/28/**SES**/H/WE

Oxley Developments Company Ltd
Email: sales@oxley.co.uk
Tel: +44 (0)1229 840609

Oxley Inc.
Email: sales@oxleyinc.com
Tel: +1 (203) 488 1033

Oxley Group Australia Pty Ltd
Email: sales@oxleygroup.com
Tel +61 (0) 2 9967 9488

www.oxleygroup.com/lamps
ODCSM40565/2/2005

Panel and lamp Body Sealed

Sunlight Viewable

Single Chip LED

IP68 Ø8.0

Features

- Panel and lamp body sealed
- Rugged glass and metal construction
- Visible up to 100,000 LUX ambient illumination
- Special neutral density lens eliminates reflected sunlight
- Contrast enhancing shroud design
- Sealed to IP68
- 100° viewing angle
- Operating temp -40 to 85°C
- Storage temp -55 to 100°C

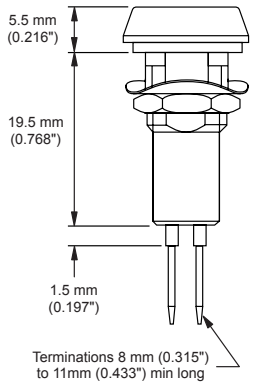

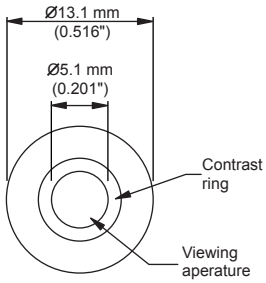

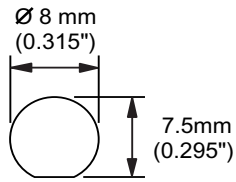

Mounting Hole

Ordering Information and Technical Characteristics

Ordering Information	Colour	Forward Voltage (V)	Current (mA)	Luminous Intensity (mcd)	Reverse Voltage (V)
STR/LH/8/RAPP/RD	Red	2.2	20	2	5
STR/LH/8/RAPP/YW	Yellow	2.2	20	1	5
STR/LH/8/RAPP/GN	Green	2.2	20	2	5
STR/LH/8/RAPP/AlGaAsRD	Red	1.9	20	54	5
STR/LH/8/RAPP/H/YW	Yellow	2.2	20	45	5
STR/LH/8/RAPP/H/GN	Green	3.6	20	56	5
STR/LH/8/RAPP/H/BE	Blue	3.6	20	54	5
STR/LH/8/RAPP/H/WE	White	3.6	20	45	5
STR/LH/8/5/RAPP/RD	Red	5	15	1.5	5
STR/LH/8/5/RAPP/YW	Yellow	5	15	0.75	5
STR/LH/8/5/RAPP/GN	Green	5	15	1.5	5
STR/LH/8/5/RAPP/AlGaAsRD	Red	5	15	41	5
STR/LH/8/5/RAPP/H/YW	Yellow	5	15	34	5
STR/LH/8/5/RAPP/H/GN	Green	5	15	42	5
STR/LH/8/5/RAPP/H/BE	Blue	5	15	41	5

Continued ...

Oxley Group Australia Pty Ltd
Email: sales@oxleygroup.com
Tel +61 (0) 2 9967 9488

Oxley Inc.
Email: sales@oxleyinc.com
Tel: +1 (203) 488 1033

Oxley Developments Company Ltd
Email: sales@oxley.co.uk
Tel: +44 (0)1229 840609

Ordering Information	Colour	Forward Voltage (V)	Current (mA)	Luminous Intensity (mcd)	Reverse Voltage (V)
STR/LH/8/5/RAPP/H/WE	White	5	15	1.5	5
STR/LH/8/12/RAPP/RD	Red	12	15	34	12
STR/LH/8/12/RAPP/YW	Yellow	12	15	0.75	12
STR/LH/8/12/RAPP/GN	Green	12	15	1.5	12
STR/LH/8/12/RAPP/AlGaAsRD	Red	12	15	41	12
STR/LH/8/12/RAPP/H/YW	Yellow	12	15	34	12
STR/LH/8/12/RAPP/H/GN	Green	12	15	42	12
STR/LH/8/12/RAPP/H/BE	Blue	12	15	41	12
STR/LH/8/12/RAPP/H/WE	White	12	15	34	12
STR/LH/8/24/RAPP/RD	Red	24	15	1.5	24
STR/LH/8/24/RAPP/YW	Yellow	24	15	0.75	24
STR/LH/8/24/RAPP/GN	Green	24	15	1.5	24
STR/LH/8/24/RAPP/AlGaAsRD	Red	24	15	41	24
STR/LH/8/24/RAPP/H/YW	Yellow	24	15	34	24
STR/LH/8/24/RAPP/H/GN	Green	24	15	42	24
STR/LH/8/24/RAPP/H/BE	Blue	24	15	41	24
STR/LH/8/24/RAPP/H/WE	White	24	15	34	24
STR/LH/8/28/RAPP/RD	Red	28	15	1.5	28
STR/LH/8/28/RAPP/YW	Yellow	28	15	0.75	28
STR/LH/8/28/RAPP/GN	Green	28	15	1.5	28
STR/LH/8/28/RAPP/AlGaAsRD	Red	28	15	41	28
STR/LH/8/28/RAPP/H/YW	Yellow	28	15	34	28
STR/LH/8/28/RAPP/H/GN	Green	28	15	42	28
STR/LH/8/28/RAPP/H/BE	Blue	28	15	41	28
STR/LH/8/28/RAPP/H/WE	White	28	15	34	28

Mean time before failure 90,000 hrs.

1) For EMI Shielded option please denote **SES** in the ordering information.
e.g. STR/LH/8/28/**SES**/H/WE

2) RAPP denotes pinpoint wide viewing (100°)

3) For night vision goggle compatible options please add **NVG** at the end of the ordering information.
e.g. STR/LH/8/24/**RAPP/NVG** - 10 = Green, 20 = Yellow and 30 = Red.

4) Flying lead terminations available on request - order FLXX, where XX = length of leads in cm

5) Customer specials available on request.

Oxley Developments Company Ltd
Email: sales@oxley.co.uk
Tel: +44 (0)1229 840609

Oxley Inc.
Email: sales@oxleyinc.com
Tel: +1 (203) 488 1033

Oxley Group Australia Pty Ltd
Email: sales@oxleygroup.com
Tel +61 (0) 2 9967 9488

www.oxleygroup.com/lamps
ODCSM40565/2/2005

Panel and lamp Body Sealed

Sunlight Viewable

Single Chip LED

IP68 - Ø8.0

Features

- Panel and lamp body sealed
- Rugged glass and metal construction
- Visible up to 100,000 LUX ambient illumination
- Special neutral density lens eliminates reflected sunlight
- Contrast enhancing shroud design
- Sealed to IP68
- Five voltage ranges as standard
- 30° viewing angle
- Reverse voltage protection (voltage version only)
- Operating temp -40 to 85°C
- Storage temp -55 to 100°C

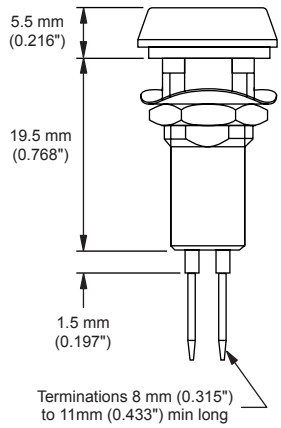

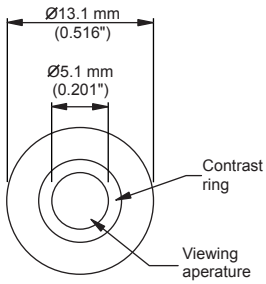

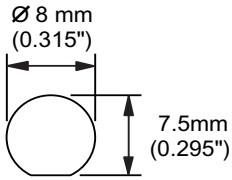

Mounting Hole

Ordering Information and Technical Characteristics

Ordering Information	Colour	Forward Voltage (V)	Current (mA)	Luminous Intensity (mcd)	Reverse Voltage (V)
STR/LH/8/RAF/RD	Red	2.2	20	15	5
STR/LH/8/RAF/YW	Yellow	2.2	20	12	5
STR/LH/8/RAF/GN	Green	2.2	20	15	5
STR/LH/8/RAF/AlGaAsRD	Red	1.9	20	360	5
STR/LH/8/RAF/H/YW	Yellow	2.2	20	300	5
STR/LH/8/RAF/H/GN	Green	3.6	20	375	5
STR/LH/8/RAF/H/BE	Blue	3.6	20	360	5
STR/LH/8/RAF/H/WE	White	3.6	20	300	5
STR/LH/8/5/RAF/RD	Red	5	15	12	5
STR/LH/8/5/RAF/YW	Yellow	5	15	9	5
STR/LH/8/5/RAF/GN	Green	5	15	12	5
STR/LH/8/5/RAF/AlGaAsRD	Red	5	15	270	5
STR/LH/8/5/RAF/H/YW	Yellow	5	15	225	5
STR/LH/8/5/RAF/H/GN	Green	5	15	282	5

Continued...

Oxley Group Australia Pty Ltd
Email: sales@oxleygroup.com
Tel +61 (0) 2 9967 9488

Oxley Inc.
Email: sales@oxleyinc.com
Tel: +1 (203) 488 1033

Oxley Developments Company Ltd
Email: sales@oxley.co.uk
Tel: +44 (0)1229 840609

Ordering Information	Colour	Forward Voltage (V)	Current (mA)	Luminous Intensity (mcd)	Reverse Voltage (V)
STR/LH/8/5/RAF/H/BE	Blue	5	15	270	5
STR/LH/8/5/RAF/H/WE	White	5	15	225	5
STR/LH/8/12/RAF/RD	Red	12	15	12	12
STR/LH/8/12/RAF/YW	Yellow	12	15	9	12
STR/LH/8/12/RAF/GN	Green	12	15	12	12
STR/LH/8/12/RAF/AlGaAsRD	Red	12	15	270	12
STR/LH/8/12/RAF/H/YW	Yellow	12	15	225	12
STR/LH/8/12/RAF/H/GN	Green	12	15	282	12
STR/LH/8/12/RAF/H/BE	Blue	12	15	270	12
STR/LH/8/12/RAF/H/WE	White	12	15	225	12
STR/LH/8/24/RAF/RD	Red	24	15	12	24
STR/LH/8/24/RAF/YW	Yellow	24	15	9	24
STR/LH/8/24/RAF/GN	Green	24	15	12	24
STR/LH/8/24/RAF/AlGaAsRD	Red	24	15	270	24
STR/LH/8/24/RAF/H/YW	Yellow	24	15	225	24
STR/LH/8/24/RAF/H/GN	Green	24	15	282	24
STR/LH/8/24/RAF/H/BE	Blue	24	15	270	24
STR/LH/8/24/RAF/H/WE	White	24	15	225	24
STR/LH/8/28/RAF/RD	Red	28	15	12	28
STR/LH/8/28/RAF/YW	Yellow	28	15	9	28
STR/LH/8/28/RAF/GN	Green	28	15	12	28
STR/LH/8/28/RAF/AlGaAsRD	Red	28	15	270	28
STR/LH/8/28/RAF/H/YW	Yellow	28	15	225	28
STR/LH/8/28/RAF/H/GN	Green	28	15	282	28
STR/LH/8/28/RAF/H/BE	Blue	28	15	270	28
STR/LH/8/28/RAF/H/WE	White	28	15	225	28

.Mean time before failure 90,000 hrs

1) For EMI shielded option please denote **SES** in the ordering information.
e.g. STR/LH/8/28/**SES/**H/WE

2) **RAF** denotes focused beam source (30°)

3) For night vision goggle compatible options please add **NVG** at the end of the ordering information.
e.g. STR/LH/8/24/**RAF/NVG** - 10 = Green, 20 = Yellow and 30 = Red.

4) Flying lead terminations available on request - order FLXX, where XX = length of leads in cm

5) Customer specials available on request.

Oxley Developments Company Ltd
Email: sales@oxley.co.uk
Tel: +44 (0)1229 840609

Oxley Inc.
Email: sales@oxleyinc.com
Tel: +1 (203) 488 1033

Oxley Group Australia Pty Ltd
Email: sales@oxleygroup.com
Tel +61 (0) 2 9967 9488

www.oxleygroup.com/lamps
ODCSM40565/2/2005

DESC 85122 Approved Indicator Lamps

Indicator Lamp

Single Chip LED

IP68 - Ø8.0

Features

- Panel and lamp body sealed
- Rugged glass and metal construction
- 100% screened, A and B tested per MIL-5-19500 JANTX
- DESC approved for use in DoD projects
- Sealed to IP68
- Approved to DESC drawing 85122

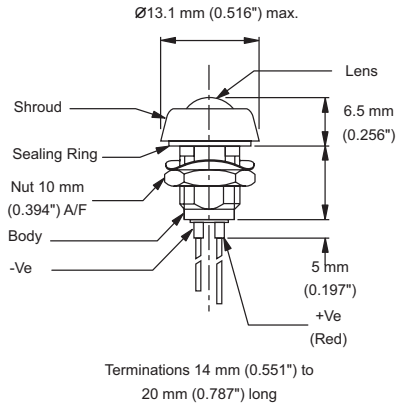

PS/LH/8

DESC Drawing Dash Number	Oxley Part Number
85122-X01	0X1100X

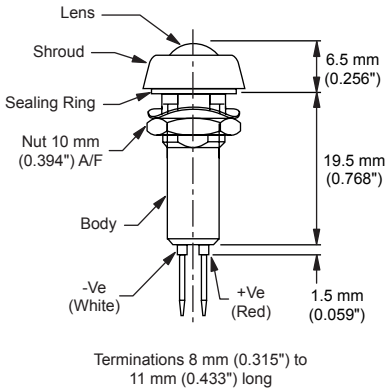

STR/LH/8/-

DESC Drawing Dash Number	Oxley Part Number
85122-X02 85122-X11	0X2100X 0X2101X

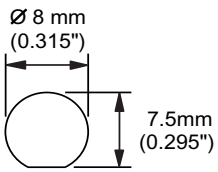

Mounting Hole Details
PS/LH/8 or STR/LH/8/-

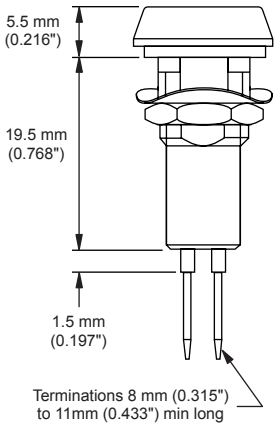

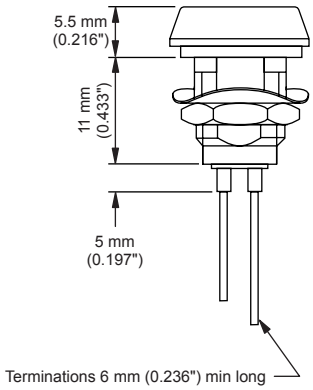

PS/LH/8/RAF

DESC Drawing Dash Number	Oxley Part Number
85122-X03	0X1200X
85122-X04	0X1300X

Part number code:
X denotes LED colour
G - Green
Y - Yellow
R - Red

DESC Drawing Dash Number	Oxley Part Number
85122-X05	0X2200X
85122-X06	0X2300X
85122-X07	0X2210X
85122-X08	0X2310X
85122-X09	0X2211X
85122-X010	0X2311X

Oxley Group Australia Pty Ltd
Email: sales@oxleygroup.com
Tel +61 (0) 2 9967 9488

Oxley Inc.
Email: sales@oxleyinc.com
Tel: +1 (203) 488 1033

Oxley Developments Company Ltd
Email: sales@oxley.co.uk
Tel: +44 (0)1229 840609

DESC 87019 Approved Indicator Lamps

Indicator Lamp

Single Chip LED

IP68 - Ø8.0

Features

- Panel and lamp body sealed
- Rugged glass and metal construction
- 100% screened, A and B tested per MIL-5-19500 JANTX
- Meets US CECOM secure lighting
- Sealed to IP68
- Approved to DESC drawing 87019

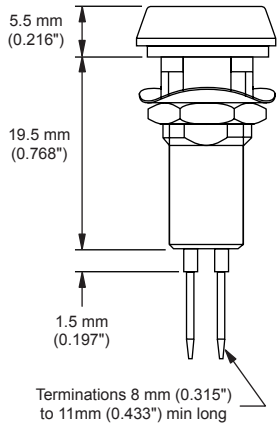

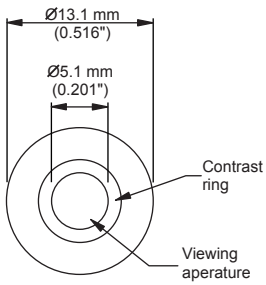

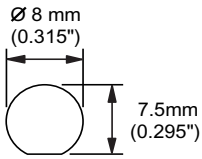

Mounting Hole

Ordering Information and Technic

DESC Drawing Dash Number	Oxley Part Number	Oxley Cross Reference Type Number	Features
87019-X01	OX2410X	STR/LH/8/XIR	Secure
87019-X02	OX2411X	STR/LH/8/XIR/SES	Secure - EMI Screen

Part number code: X denotes LED colour, G - Green, Y - Yellow, R - Red

Optical Characteristics

All Types		Red	Yellow	Green
Minimum luminous intensity (on-axis at 10 mA) mcd		0.5	0.5	0.5
Minimum luminous intensity (on axis at 10 mA) mcd		2.4	4	5
Power emission (% of total) (in accordance with DESC 87019)	**700-930nm**	0.2%	-	-
	675-930nm	-	0.2%	-
	620-930nm	-	-	0.2%
Dominant wavelength (nm)	**min.**	615	580	556
	max.	630	588	572

Mean time before failure 90,000 hrs.

Oxley Developments Company Ltd
Email: sales@oxley.co.uk
Tel: +44 (0)1229 840609

Oxley Inc.
Email: sales@oxleyinc.com
Tel: +1 (203) 488 1033

Oxley Group Australia Pty Ltd
Email: sales@oxleygroup.com
Tel +61 (0) 2 9967 9488

www.oxleygroup.com/lamps
ODCSM40565/2/2005

Panel and Lamp Body Sealed — Dual Polarity

LED Indicator Mains (ac) Powered — IP68 - Ø8.0

Features

- Loop hole tag terminals
- Panel and lamp body sealed
- Rugged glass and metal construction
- Two voltage variants available
- Sealed to IP68
- Clear diffused lens
- 60° Viewing angle
- Operating temp -40 to 85°C
- Storage temp -55 to 100°C

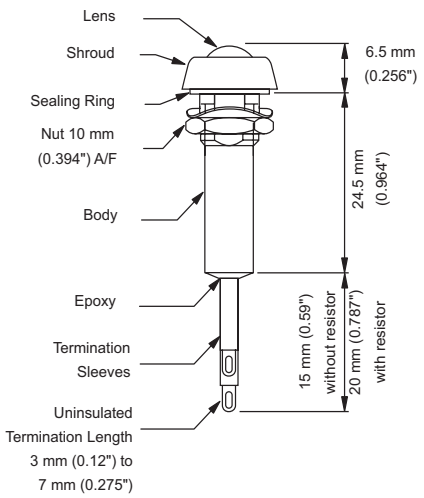

STR/LH/8/-/Ref1

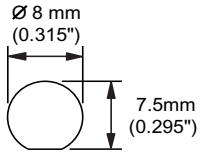

Mounting Hole Details

Ordering Information and Technical Characteristics

Ordering Information	Colour	Forward Voltage (V max RMS)	Current (mA)	Luminous Intensity (mcd)
STR/LH/8/110/REF1/AlGaAsRD	Red	110	5	10
STR/LH/8/110/REF1/RD	Red	110	5	5
STR/LH/8/110/REF1/AR	Amber	110	5	3
STR/LH/8/110/REF1/YW	Yellow	110	5	3
STR/LH/8/110/REF1/GN	Green	110	5	10
STR/LH/8/240/REF1/AlGaAsRD	Red	240	2.5	10
STR/LH/8/240/REF1/RD	Red	240	2.5	5
STR/LH/8/240/REF1/AR	Amber	240	2.5	3
STR/LH/8/240/REF1/YW	Yellow	240	2.5	3
STR/LH/8/240/REF1/GN	Green	240	2.5	10

Supply frequency (Hz) 50-60

1) Tag Terminations are denoted by REF1 in the part number.

2) Unlike neons, LED arrays operate below 50% supply voltage without flicker. Reduction in light output is proportional to fall in supply voltage.

3) For high intensity LED colours, including: white, blue, green, yellow and amber, place an **H** in the part number e.g. STR/LH/8/110/Ref1/**H**/YW

4) Customer specials available on request.

Oxley Group Australia Pty Ltd
Email: sales@oxleygroup.com
Tel +61 (0) 2 9967 9488

Oxley Inc.
Email: sales@oxleyinc.com
Tel: +1 (203) 488 1033

Oxley Developments Company Ltd
Email: sales@oxley.co.uk
Tel: +44 (0)1229 840609

Panel and Lamp Body Sealed — Dual Polarity

LED Indicator Mains (ac) Powered — IP68 - Ø8.0

Features

- Flying lead terminals (standard length of 200mm)
- Panel and lamp body sealed
- Rugged glass and metal construction
- Sealed to IP68
- Two voltage variants available
- Clear diffused lens
- 60° Viewing angle
- Operating temp -40 to 85°C
- Storage temp -55 to 100°C

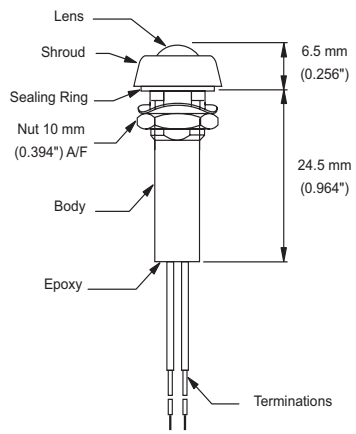

STR/LH/8/-

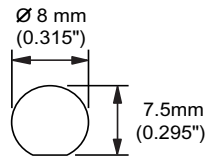

Mounting Hole

Ordering Information and Technical Characteristics

Ordering Information	Colour	Forward Voltage V (max RMS)	Current (mA)	Luminous Intensity (mcd)
STR/LH/8/110/AL	AlGaAs Red	110	5	10
STR/LH/8/110/RD	Red	110	5	5
STR/LH/8/110/AR	Amber	110	5	3
STR/LH/8/110/YW	Yellow	110	5	3
STR/LH/8/110/GN	Green	110	5	10
STR/LH/8/240/AL	AlGaAs Red	240	2.5	10
STR/LH/8/240/RD	Red	240	2.5	5
STR/LH/8/240/AR	Amber	240	2.5	3
STR/LH/8/240/YW	Yellow	240	2.5	3
STR/LH/8/240/GN	Green	240	2.5	10

Supply frequency (Hz) 50-60.

1) Unlike neons, LED arrays operate below 50% supply voltage without flicker. Reduction in light output is proportional to fall in supply voltage.

2) For high intensity LED colours, including: white, blue, green, yellow and amber, place an **H** in the part number e.g. STR/LH/8/110/Ref1/**H**/YW

3) Customer specials available on request.

Oxley Developments Company Ltd
Email: sales@oxley.co.uk
Tel: +44 (0)1229 840609

Oxley Inc.
Email: sales@oxleyinc.com
Tel: +1 (203) 488 1033

Oxley Group Australia Pty Ltd
Email: sales@oxleygroup.com
Tel +61 (0) 2 9967 9488

www.oxleygroup.com/lamps
ODCSM40565/2/2005

Panel and Lamp Body Sealed Neon Bulb

Neon Indicator Mains (ac) Powered IP68 - Ø8.0

Features

- Flying lead terminations (standard length of 200 mm)
- Panel and lamp body sealed
- Rugged glass and metal construction
- Sealed to IP68
- Two voltage variants available
- Coloured diffused lens
- 80° Viewing angle
- Operating temp -40 to 85°C
- Storage temp -55 to 100°C

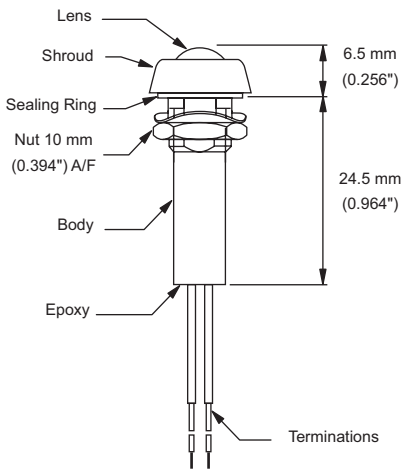

STR/NLH/-

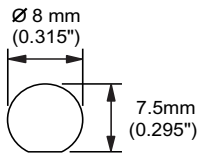

Mounting Hole

Ordering Information and Technical Characteristics

Ordering Information	Colour	Operating Voltage (V max RMS)	Current (mA)	Luminous Intensity (mcd)
STR/NLH/31/110	Red	110	1	15
STR/NLH/32/110	Amber	110	1	15
STR/NLH/34/110	Green	110	1	15
STR/NLH/36/110	Clear	110	1	15
STR/NLH/31/240	Red	240	1	15
STR/NLH/32/240	Amber	240	1	15
STR/NLH/34/240	Green	240	1	15
STR/NLH/36/240	Clear	240	1	15

1) Proof voltage (terminations to body): 1,000 V.d.c.
Insulation resistance (at 500 V.d.c.): >5,000 Mohms.

2) Panel lamps without resistors available on request.

3) Customer specials available on request.

Oxley Group Australia Pty Ltd
Email: sales@oxleygroup.com
Tel +61 (0) 2 9967 9488

Oxley Inc.
Email: sales@oxleyinc.com
Tel: +1 (203) 488 1033

Oxley Developments Company Ltd
Email: sales@oxley.co.uk
Tel: +44 (0)1229 840609

Panel and Lamp Body Sealed Neon Bulb

Neon Indicator Mains (ac) Powered IP68 - Ø8.0

Features

- Loop hole tag terminations
- Panel and lamp body sealed
- Rugged glass and metal construction
- Sealed to IP68
- Two voltage variants available
- Coloured diffused lens
- 80° Viewing angle
- Operating temp -40 to 85°C
- Storage temp -55 to 100°C

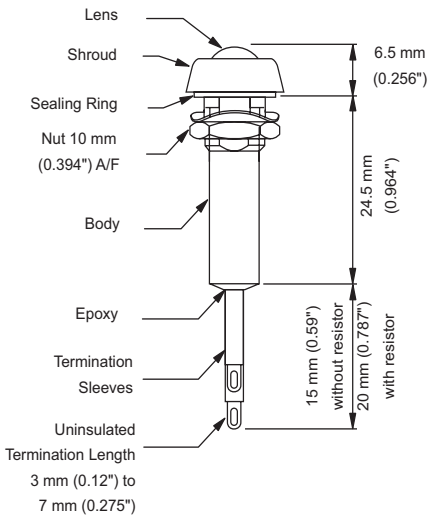

STR/NLH/-/REF1

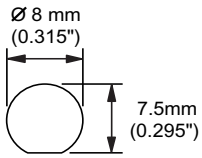

Mounting Hole

Ordering Information and Technical Characteristics

Ordering Information	Colour	Operating Voltage (V max RMS)	Current (mA)	Luminous Intensity (mcd)
STR/NLH/31/110/REF1	Red	110	1	15
STR/NLH/32/110/REF1	Amber	110	1	15
STR/NLH/34/110/REF1	Green	110	1	15
STR/NLH/36/110/REF1	Clear	110	1	15
STR/NLH/31/240/REF1	Red	240	1	15
STR/NLH/32/240/REF1	Amber	240	1	15
STR/NLH/34/240/REF1	Green	240	1	15
STR/NLH/36/240/REF1	Clear	240	1	15

1) REF1 denotes loop hole tag terminations.

2) Proof voltage (terminations to body): 1000 V dc
Insulation resistance (at 500 V dc): >5000 Mohms.

3) Panel lamps without resistors available on request.

4) Customer specials available on request.

Oxley Developments Company Ltd
Email: sales@oxley.co.uk
Tel: +44 (0)1229 840609

Oxley Inc.
Email: sales@oxleyinc.com
Tel: +1 (203) 488 1033

Oxley Group Australia Pty Ltd
Email: sales@oxleygroup.com
Tel +61 (0) 2 9967 9488

www.oxleygroup.com/lamps
ODCSM40565/2/2005

Panel and Lamp Body Sealed

Indicator Lamp Rear Mounting

Single Chip LED

IP67 - Ø8.0

Features

- Panel and lamp body sealed
- Reduces assembly time when access to rear/front of panel is limited
- Sealed to IP67
- Lamp removal from chassis possible without removing terminations
- Flat diffused lens
- 60° Viewing angle
- Operating temp -40 to 85°C
- Storage temp -55 to 100°C

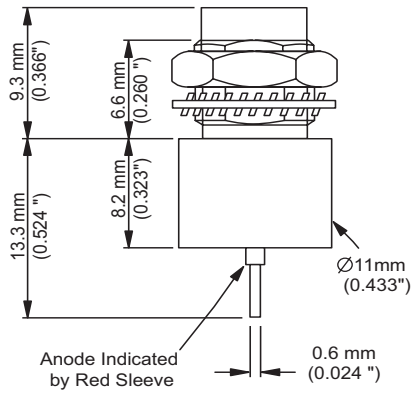

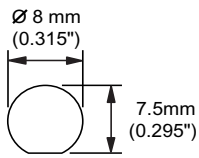

STR5/-
Mounting Hole Size

Ordering Information and Technical Characteristics

Ordering Information	Colour	Forward Voltage (V)	Current (mA)	Luminous Intensity (mcd	Reverse Voltage (V)
STR/5/LH/8/RD	Red	2.2	1	50	5
STR/5/LH/8/YW	Yellow	2.2	1	40	5
STR/5/LH/8/GN	Green	2.2	1	50	5
STR/5/LH/8/AlGaAsRD	Red	1.9	1	1200	5
STR/5/LH/8/H/YW	Yellow	2.2	1	1000	5
STR/5/LH/8/H/GN	Green	3.6	1	1250	5
STR/5/LH/8/H/BE	Blue	3.6	1	1200	5
STR/5/LH/8/H/WE	White	3.6	1	1000	5

Mean time before failure 90,000 hrs.

1) For NVIS compatibility, please contact our Technical Sales Department.

2) Customer specials available on request.

Oxley Group Australia Pty Ltd
Email: sales@oxleygroup.com
Tel +61 (0) 2 9967 9488

Oxley Inc.
Email: sales@oxleyinc.com
Tel: +1 (203) 488 1033

Oxley Developments Company Ltd
Email: sales@oxley.co.uk
Tel: +44 (0)1229 840609

Type No. - STR5/LH/8

Panel and Lamp Body Sealed — Single Chip LED

Sunlight Viewable Rear Mounting — IP67 - Ø8.0

Features

- 30° viewing angle
- Panel and lamp body sealed
- Can reduce assembly time when access to rear/front of panel is limited
- Visible up to 100,00 LUX ambient illumination
- Sealed to IP67
- Lamp removal from chassis possible without removing terminations
- Special neutral density lens eliminates reflected sunlight
- Operating temp -40 to 85°C
- Storage temp -55 to 100°C

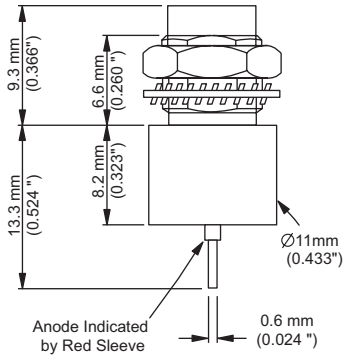

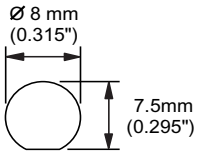

STR5/-
Mounting Hole Size

Ordering Information and Technical Characteristics

Ordering Information	Colour	Forward Voltage (V)	Current (mA)	Luminous Intensity (mcd	Reverse Voltage (V)
STR/5/LH/8/RAF/GN	Green	2.2	20	15	5
STR/5/LH/8/RAF/YW	Yellow	2.2	20	12	5
STR/5/LH/8/RAF/RD	Red	2.2	20	15	5
STR/5/LH/8/RAF/H/GN	Green	3.6	20	375	5
STR/5/LH/8/RAF/H/YW	Yellow	2.2	20	300	5
STR/5/LH/8/RAF/AlGaAsRD	Red	1.9	20	360	5
STR/5/LH/8/RAF/H/BE	Blue	3.6	20	360	5
STR/5/LH/8/RAF/H/WE	White	3.6	20	300	5

1) For NVIS compatibility, please contact our technical sales department

2) RAF denotes focussed beam source (30°)

3) Mean time before failure (MTBF) 90,000 hrs.

4) Customer specials available on request.

Oxley Developments Company Ltd
Email: sales@oxley.co.uk
Tel: +44 (0)1229 840609

Oxley Inc.
Email: sales@oxleyinc.com
Tel: +1 (203) 488 1033

Oxley Group Australia Pty Ltd
Email: sales@oxleygroup.com
Tel +61 (0) 2 9967 9488

www.oxleygroup.com/lamps
ODCSM40565/2/2005

Panel and Lamp Body Sealed

Sunlight Viewable Rear Mounting

Single Chip LED

IP67 - Ø8.0

Features

- 100° viewing angle
- Panel and lamp body sealed
- Can reduce assembly time when access to rear/front of panel is limited
- Visible up to 100,00 LUX ambient illumination
- Sealed to IP67
- Lamp removal from chassis possible without removing terminations
- Special neutral density lens eliminates reflected sunlight
- Operating temp -40 to 85°C
- Storage temp -55 to 100°C

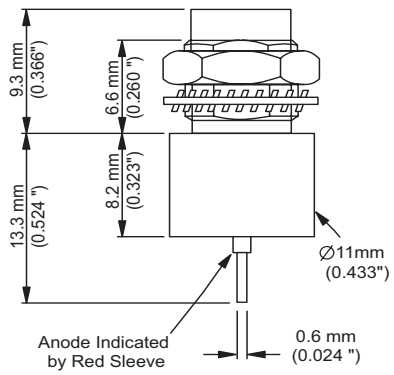

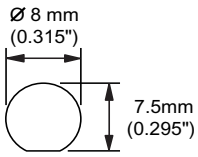

STR5/-
Mounting Hole Size

Ordering Information and Technical Characteristics

Ordering Information	Colour	Forward Voltage (V)	Current (mA)	Luminous Intensity (mcd	Reverse Voltage (V)
STR/5/LH/8/RAPP/GN	Green	2.2	20	2	5
STR/5/LH/8/RAPP/YW	Yellow	2.2	20	1	5
STR/5/LH/8/RAPP/RD	Red	2.2	20	2	5
STR/5/LH/8/RAPP/H/GN	Green	3.6	20	56	5
STR/5/LH/8/RAPP/H/YW	Yellow	2.2	20	45	5
STR/5/LH/8/RAPP/AlGaAsRD	Red	1.9	20	54	5
STR/5/LH/8/RAPP/H/BE	Blue	3.6	20	54	5
STR/5/LH/8/RAPP/H/WE	White	3.6	20	45	5

1) For NVIS compatability, please contact our sales department

2) RAPP denotes wide viewing 100°.

3) Customer specials available on request.

Oxley Group Australia Pty Ltd
Email: sales@oxleygroup.com
Tel +61 (0) 2 9967 9488

Oxley Inc.
Email: sales@oxleyinc.com
Tel: +1 (203) 488 1033

Oxley Developments Company Ltd
Email: sales@oxley.co.uk
Tel: +44 (0)1229 840609

Indicator Lamp

Rear Mounting

Single Chip LED

IP67 - Ø8.0

Features

- Can reduce assembly time when access to rear/front of panel is limited
- Sealing to MIL-L-3661
- High reliability
- Lamp removal from chassis possible without removing terminations
- Reverse voltage protection (voltage variation only)
- Flat diffused lens
- 60° Viewing angle
- Operating temp -40 to 85°C
- Storage temp -55 to 100°C

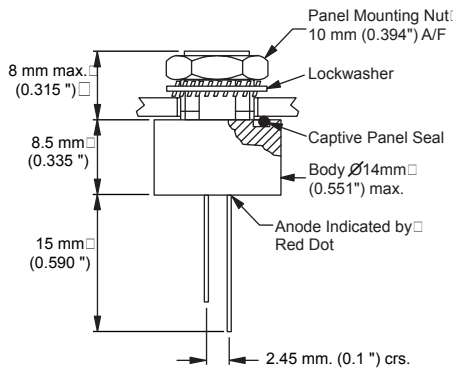

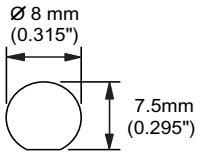

STR501/
Mounting Hole Size

Ordering Information and Technical Characteristics

Ordering Information	Colour	Forward Voltage (V)	Current (mA)	Luminous Intensity (mcd)	Reverse Voltage (V)
STR/501/LH/8/RD	Red	2.2	20	50	5
STR/501/LH/8/YW	Yellow	2.2	20	40	5
STR/501/LH/8/GN	Green	2.2	20	50	5
STR/501/LH/8/AlGaAsRD	Red	1.9	20	1200	5
STR/501/LH/8/H/YW	Yellow	2.2	20	1000	5
STR/501/LH/8/H/GN	Green	3.6	20	1250	5
STR/501/LH/8/H/BE	Blue	3.6	20	1200	5
STR/501/LH/8/H/WE	White	3.6	20	1000	5
STR/501/LH/8/5/RD	Red	5	15	38	5
STR/501/LH/8/5/YW	Yellow	5	15	30	5
STR/501/LH/8/5/GN	Green	5	15	38	5
STR/501/LH/8/5/AlGaAsRD	Red	5	15	900	5
STR/501/LH/8/5/H/YW	Yellow	5	15	750	5
STR/501/LH/8/5/H/GN	Green	5	15	940	5
STR/501/LH/8/5/H/BE	Blue	5	15	900	5
STR/501/LH/8/5/H/WE	White	5	15	750	5

Oxley Developments Company Ltd
Email: sales@oxley.co.uk
Tel: +44 (0)1229 840609

Oxley Inc.
Email: sales@oxleyinc.com
Tel: +1 (203) 488 1033

Oxley Group Australia Pty Ltd
Email: sales@oxleygroup.com
Tel +61 (0) 2 9967 9488

www.oxleygroup.com/lamps
ODCSM40565/2/2005

Ordering Information	Colour	Forward Voltage (V)	Current (mA)	Luminous Intensity (mcd)	Reverse Voltage (V)
STR/501/LH/8/12/RD	Red	12	15	38	12
STR/501/LH/8/12/YW	Yellow	12	15	30	12
STR/501/LH/8/12/GN	Green	12	15	38	12
STR/501/LH/8/12/AlGaAsRD	Red	12	15	900	12
STR/501/LH/8/12/H/YW	Yellow	12	15	750	12
STR/501/LH/8/12/H/GN	Green	12	15	940	12
STR/501/LH/8/12/H/BE	Blue	12	15	900	12
STR/501/LH/8/12/H/WE	White	12	15	750	12
STR/501/LH/8/15/RD	Red	15	15	38	15
STR/501/LH/8/15/YW	Yellow	15	15	30	15
STR/501/LH/8/15/GN	Green	15	15	38	15
STR/501/LH/8/15/AlGaAsRD	Red	15	15	900	15
STR/501/LH/8/15/H/YW	Yellow	15	15	750	15
STR/501/LH/8/15/H/GN	Green	15	15	940	15
STR/501/LH/8/15/H/BE	Blue	15	15	900	15
STR/501/LH/8/15/H/WE	White	15	15	750	15
STR/501/LH/8/24/RD	Red	24	15	38	24
STR/501/LH/8/24/YW	Yellow	24	15	30	24
STR/501/LH/8/24/GN	Green	24	15	38	24
STR/501/LH/8/24/AlGaAsRD	Red	24	15	900	24
STR/501/LH/8/24/H/YW	Yellow	24	15	750	24
STR/501/LH/8/24/H/GN	Green	24	15	940	24
STR/501/LH/8/24/H/BE	Blue	24	15	900	24
STR/501/LH/8/24/H/WE	White	24	15	750	24
STR/501/LH/8/28/RD	Red	28	15	38	28
STR/501/LH/8/28/YW	Yellow	28	15	30	28
STR/501/LH/8/28/GN	Green	28	15	38	28
STR/501/LH/8/28/AlGaAsRD	Red	28	15	900	28
STR/501/LH/8/28/H/YW	Yellow	28	15	750	28
STR/501/LH/8/28/H/GN	Green	28	15	940	28
STR/501/LH/8/28/H/BE	Blue	28	15	900	28
STR/501/LH/8/28/H/WE	White	28	15	750	28

1) Voltage variants ranging from 5 to 28 volts.

2) For RAF - focused sunlight viewable (30°), RAPP - pin point wide viewing sunlight viewable (100°) and NVIS compatibility. (Please contact our Sales Department.)

Oxley Group Australia Pty Ltd
Email: sales@oxleygroup.com
Tel +61 (0) 2 9967 9488

Oxley Inc.
Email: sales@oxleyinc.com
Tel: +1 (203) 488 1033

Oxley Developments Company Ltd
Email: sales@oxley.co.uk
Tel: +44 (0)1229 840609

Panel Sealed Bezel LED Indicator

Single Chip LED IP67 - Ø8.0

Features

- Protective cone bezel
- Reflective cone design
- Sealing available to IP67
- Low profile option available
- LED lens
- 80° Viewing angle
- Operating temp -40 to 85°C
- Storage temp -40 to 85°C

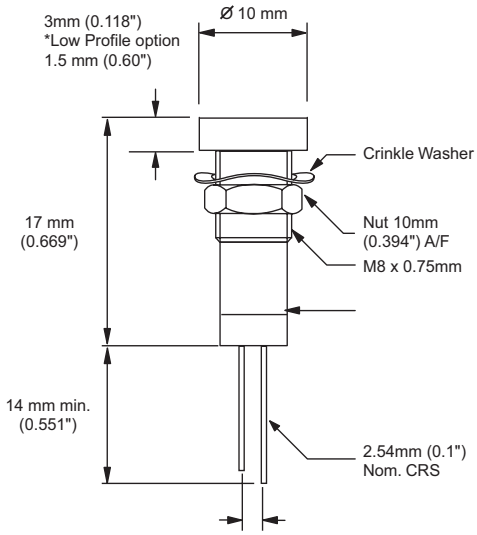

OXL/CLH/80
(For Black Body and low profile - see note 1)

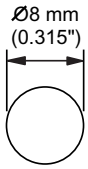

Mounting Hole

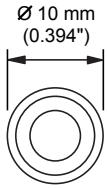

Front View

Ordering Information and Technical Characteristics

Ordering Information	Colour	Forward Voltage (V)	Current (mA)	Luminous Intensity (mcd)	Reverse Voltage (V)
OXL/CLH/80/RD	Red	2.2	20	45	5
OXL/CLH/80/YW	Yellow	2.2	20	45	5
OXL/CLH/80/GN	Green	2.2	20	45	5
OXL/CLH/80/AlGaAsRD	Red	1.9	20	1200	5
OXL/CLH/80/H/YW	Yellow	2.2	20	1000	5
OXL/CLH/80/H/GN	Green	3.6	20	1250	5
OXL/CLH/80/H/BE	Blue	3.6	20	1200	5
OXL/CLH/80/H/WE	White	3.6	20	1000	5
OXL/CLH/80/5/RD	Red	5	15	34	5
OXL/CLH/80/5/YW	Yellow	5	15	34	5
OXL/CLH/80/5/GN	Green	5	15	34	5
OXL/CLH/80/5/AlGaAsRD	Red	5	15	900	5
OXL/CLH/80/5/H/YW	Yellow	5	15	750	5
OXL/CLH/80/5/H/GN	Green	5	15	940	5
OXL/CLH/80/5/H/BE	Blue	5	15	900	5
OXL/CLH/80/5/H/WE	White	5	15	750	5

Continued ...

Oxley Developments Company Ltd
Email: sales@oxley.co.uk
Tel: +44 (0)1229 840609

Oxley Inc.
Email: sales@oxleyinc.com
Tel: +1 (203) 488 1033

Oxley Group Australia Pty Ltd
Email: sales@oxleygroup.com
Tel +61 (0) 2 9967 9488

www.oxleygroup.com/lamps
ODCSM40565/2/2005

Ordering Information	Colour	Forward Voltage (V)	Current (mA)	Luminous Intensity (mcd)	Reverse Voltage (V)
OXL/CLH/80/12/RD	Red	12	15	34	12
OXL/CLH/80/12/YW	Yellow	12	15	34	12
OXL/CLH/80/12/GN	Green	12	15	34	12
OXL/CLH/80/12/AlGaAsRD	Red	12	15	900	12
OXL/CLH/80/12/H/YW	Yellow	12	15	750	12
OXL/CLH/80/12/H/GN	Green	12	15	940	12
OXL/CLH/80/12/H/BE	Blue	12	15	900	12
OXL/CLH/80/12/H/WE	White	12	15	750	12
OXL/CLH/80/15/RD	Red	15	15	34	15
OXL/CLH/80/15/YW	Yellow	15	15	34	15
OXL/CLH/80/15/GN	Green	15	15	34	15
OXL/CLH/80/15/AlGaAsRD	Red	15	15	900	15
OXL/CLH/80/15/H/YW	Yellow	15	15	750	15
OXL/CLH/80/15/H/GN	Green	15	15	940	15
OXL/CLH/80/15/H/BE	Blue	15	15	900	15
OXL/CLH/80/15/H/WE	White	15	15	750	15
OXL/CLH/80/24/RD	Red	24	15	34	24
OXL/CLH/80/24/YW	Yellow	24	15	34	24
OXL/CLH/80/24/GN	Green	24	15	34	24
OXL/CLH/80/24/AlGaAsRD	Red	24	15	900	24
OXL/CLH/80/24/H/YW	Yellow	24	15	750	24
OXL/CLH/80/24/H/GN	Green	24	15	940	24
OXL/CLH/80/24/H/BE	Blue	24	15	900	24
OXL/CLH/80/24/H/WE	White	24	15	750	24
OXL/CLH/80/28/RD	Red	28	15	34	28
OXL/CLH/80/28/YW	Yellow	28	15	34	28
OXL/CLH/80/28/GN	Green	28	15	34	28
OXL/CLH/80/28/AlGaAsRD	Red	28	15	900	28
OXL/CLH/80/28/H/YW	Yellow	28	15	750	28
OXL/CLH/80/28/H/GN	Green	28	15	940	28
OXL/CLH/80/28/H/BE	Blue	28	15	900	28
OXL/CLH/80/28/H/WE	White	28	15	750	28

Mean time before failure 90,000 hrs.

Notes:

1) For Black Body, Low Profile option (not shown) - add **LP/BB** to the part number when ordering.

2) Flying lead terminations available on request - order FLXX, where XX = length of leads in cm

3) Customer specials available on request.

Oxley Group Australia Pty Ltd
Email: sales@oxleygroup.com
Tel +61 (0) 2 9967 9488

Oxley Inc.
Email: sales@oxleyinc.com
Tel: +1 (203) 488 1033

Oxley Developments Company Ltd
Email: sales@oxley.co.uk
Tel: +44 (0)1229 582621

Type No. - OXL/CLH/80/P/BB

Panel Sealed - Single Chip LED

Bezel Prominent LED Indicator IP67 - Ø8.0

Features

- Low profile
- Black anodized body for corrosive atmospheres
- Sealing available to IP67
- LED lens
- 80° Viewing angle
- Operating temp -40 to 85°C
- Storage temp -40 to 85°C

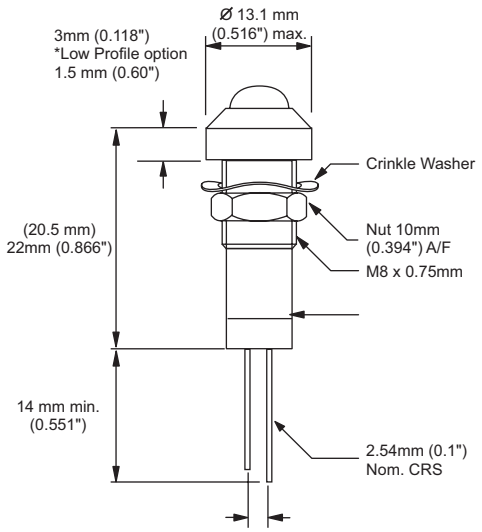

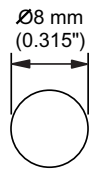

Mounting Hole dia.

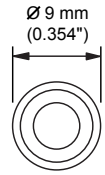

Front View

Ordering Information and Technical Characteristics

Ordering Information	Colour	Forward Voltage (V)	Current (mA)	Luminous Intensity (mcd)	Reverse Voltage (V)
OXL/CLH/80/P/BB/RD	Red	2.2	20	45	5
OXL/CLH/80/P/BB/YW	Yellow	2.2	20	45	5
OXL/CLH/80/P/BB/GN	Green	2.2	20	45	5
OXL/CLH/80/P/BB/AlGaAsRD	Red	1.9	20	1200	5
OXL/CLH/80/P/BB/H/YW	Yellow	2.2	20	1000	5
OXL/CLH/80/P/BB/H/GN	Green	3.6	20	1250	5
OXL/CLH/80/P/BB/H/BE	Blue	3.6	20	1200	5
OXL/CLH/80/P/BB/H/WE	White	3.6	20	1000	5

Mean time before failure 90,000 hrs.

1) Flying lead terminations available on voltage variants available on request - order FLXX, where XX = length of leads in cm

Oxley Developments Company Ltd
Email: sales@oxley.co.uk
Tel: +44 (0)1229 840609

Oxley Inc.
Email: sales@oxleyinc.com
Tel: +1 (203) 488 1033

Oxley Group Australia Pty Ltd
Email: sales@oxleygroup.com
Tel +61 (0) 2 9967 9488

www.oxleygroup.com/lamps
ODCSM40565/2/2005

Panel and Lamp Body Sealed Domed Lens

Single Chip LED IP68-Ø10.0 -

Features

- Panel and lamp body sealed
- Rugged glass and metal construction
- Black anodised body for salt laden atmospheres
- Clear domed lens, wide viewing angle
- Sealed to IP68
- Integral resistors - five standard voltage variant available
- 100° Viewing angle
- Operating temp -40 to 85°C
- Storage temp -55 to 100°C

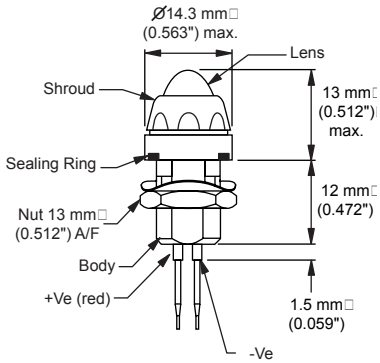

Terminations 8 mm (0.315") to 11 mm (0.433") long

STR/LH23/10/-

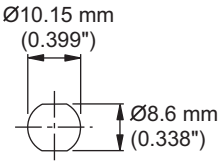

Mounting Hole

Ordering Information and Technical Characteristics

Ordering Information	Colour	Forward Voltage (V)	Current (mA)	Luminous Intensity (mcd)	Reverse Voltage (V)
STR/LH23/10/RD	Red	1.9	20	50	5
STR/LH23/10/AR	Amber	2.2	20	40	5
STR/LH23/10/YW	Yellow	2.2	20	40	5
STR/LH23/10/GN	Green	2.2	20	50	5
STR/LH23/10/5/RD	Red	5	15	38	5
STR/LH23/10/5/AR	Amber	5	15	30	5
STR/LH23/10/5/YW	Yellow	5	15	30	5
STR/LH23/10/5/GN	Green	5	15	38	5
STR/LH23/10/12/RD	Red	12	15	38	12
STR/LH23/10/12/AR	Amber	12	15	30	12
STR/LH23/10/12/YW	Yellow	12	15	30	12
STR/LH23/10/12/GN	Green	12	15	38	12

Mean time before failure 90,000 hrs

Oxley Group Australia Pty Ltd
Email: sales@oxleygroup.com
Tel +61 (0) 2 9967 9488

Oxley Inc.
Email: sales@oxleyinc.com
Tel: +1 (203) 488 1033

Oxley Developments Company Ltd
Email: sales@oxley.co.uk
Tel: +44 (0)1229 840609

Ordering Information	Colour	Forward Voltage (V)	Current (mA)	Luminous Intensity (mcd)	Reverse Voltage (V)
STR/LH23/10/15/RD	Red	15	15	38	15
STR/LH23/10/15/AR	Amber	15	15	30	15
STR/LH23/10/15/YW	Yellow	15	15	30	15
STR/LH23/10/15/GN	Green	15	15	38	15
STR/LH23/10/24/RD	Red	24	15	38	24
STR/LH23/10/24/AR	Amber	24	15	30	24
STR/LH23/10/24/YW	Yellow	24	15	30	24
STR/LH23/10/24/GN	Green	24	15	38	24
STR/LH23/10/28/RD	Red	28	15	38	28
STR/LH23/10/28/AR	Amber	28	15	30	28
STR/LH23/10/28/YW	Yellow	28	15	30	28
STR/LH23/10/28/GN	Green	28	15	38	28

Mean time before failure 90,000 hrs

1) High Intensity options and customer specials available on request.

Oxley Developments Company Ltd
Email: sales@oxley.co.uk
Tel: +44 (0)1229 840609

Oxley Inc.
Email: sales@oxleyinc.com
Tel: +1 (203) 488 1033

Oxley Group Australia Pty Ltd
Email: sales@oxleygroup.com
Tel +61 (0) 2 9967 9488

www.oxleygroup.com/lamps
ODCSM40565/2/2005

Two-Part LED Indicator

Domed Lens

Single Chip LED

IP68-Ø10.0 -

Features

- 2 part construction permits wire-less detachment of front panel
- Rugged glass and metal construction
- Panel sealed to IP68
- Improved equipment reliability, fewer solder joints
- Clear diffused lens
- 80° Viewing angle
- Operating temp -40 to 85°C
- Storage temp -55 to 100°C

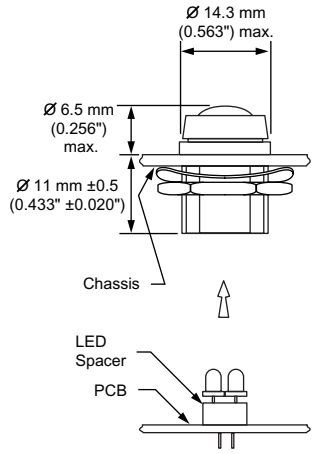

STR/LH23/10/LX/-

Note: spacer not included

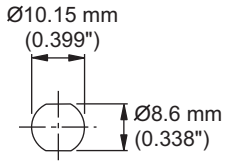

Mounting Hole (STR/LH23/10/-)

Ordering Information and Technical Characteristics

Ordering Information	Colour	Forward Voltage (V)	Current (mA)	Luminous Intensity (mcd)	Reverse Voltage (V)
STR/LH23/10/LX/RD	Red	2.2	20	20	5
STR/LH23/10/LX/YW	Yellow	2.2	20	20	5
STR/LH23/10/LX/GN	Green	2.2	20	20	5
STR/LH23/10/LX/AlGaAsRD	Red	1.9	20	1200	5
STR/LH23/10/LX/H/YW	Yellow	2.2	20	1000	5
STR/LH23/10/LX/H/GN	Green	3.6	20	1250	5
STR/LH23/10/LX/H/BE	Blue	3.6	20	1200	5
STR/LH23/10/LX/H/WE	White	3.6	20	1000	5

Mean time before failure 90,000 hrs.

1) Customer specials available on request.

Oxley Group Australia Pty Ltd
Email: sales@oxleygroup.com
Tel +61 (0) 2 9967 9488

Oxley Inc.
Email: sales@oxleyinc.com
Tel: +1 (203) 488 1033

Oxley Developments Company Ltd
Email: sales@oxley.co.uk
Tel: +44 (0)1229 840609

Bi-Segmented LED Indicator

Flat Lens

Single Chip LED

IP68-Ø10.0-

Features

- Replaces two single indicators
- Independently addressable segments
- Sealed to IP68
- Flat clear flat diffused lens
- 60° Viewing angle
- Operating temp -40 to 85°C
- Storage temp -55 to 100°C

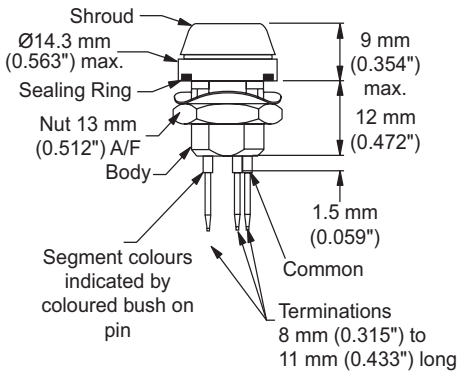

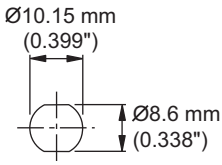

Mounting Hole 2/STR/LH23/10/-

Ordering Information and Technical Characteristics .

Ordering Information	Colour	Forward Voltage (V)	Current (mA)	Luminous Intensity (mcd)	Reverse Voltage (V)
2STR/LH23/10/RD/RD	Red	2.2	20	15	5
	Red	2.2		15	5
2STR/LH23/10/RD/GN	Red	2.2	20	15	5
	Green	2.2		15	5
2STR/LH23/10/RD/YW	Red	2.2	20	15	5
	Yellow	2.2		12	5
2STR/LH23/10/GN/GN	Green	2.2	20	15	5
	Green	2.2		15	5
2STR/LH23/10/GN/RD	Green	2.2	20	15	5
	Red	2.2		15	5
2STR/LH23/10/GN/YW	Green	2.2	20	15	5
	Yellow	2.2		12	5
2STR/LH23/10/YW/YW	Yellow	2.2	20	12	5
	Yellow	2.2		12	5
2STR/LH23/10/YW/RD	Yellow	2.2	20	12	5
	Red	2.2		15	5

Continued...

Oxley Developments Company Ltd
Email: sales@oxley.co.uk
Tel: +44 (0)1229 840609

Oxley Inc.
Email: sales@oxleyinc.com
Tel: +1 (203) 488 1033

Oxley Group Australia Pty Ltd
Email: sales@oxleygroup.com
Tel +61 (0) 2 9967 9488

www.oxleygroup.com/lamps
ODCSM40565/2/2005

Ordering Information	Colour	Forward Voltage (V)	Current (mA)	Luminous Intensity (mcd)	Reverse Voltage (V)
2STR/LH23/10/YW/GN	Yellow	2.2	20	12	5
	Green	2.2		15	5
2STR/LH23/10/H/RD/RD	Red	1.9	20	1200	5
	Red	2.2		15	5
2STR/LH23/10/H/RD/YW	Red	1.9	20	1200	5
	Yellow	2.2		1000	5
2STR/LH23/10/H/RD/GN	Red	1.9	20	1200	5
	Green	3.6		1250	5
2STR/LH23/10/H/RD/YW	Red	1.9	20	1200	5
	Yellow	2.2		1000	5
2STR/LH23/10/H/YW/YW	Yellow	2.2	20	1000	5
	Yellow	2.2		1000	5
2STR/LH23/10/H/YW/RD	Yellow	2.2	20	1000	5
	Red	1.9		1200	5
2STR/LH23/10/H/YW/GN	Yellow	2.2	20	1000	5
	Green	3.6		1250	5
2STR/LH23/10/H/YW/BE	Yellow	2.2	20	1000	5
	Blue	3.6		1200	5
2STR/LH23/10/H/YW/WE	Yellow	2.2	20	1000	5
	White	3.6		1000	5
2STR/LH23/10/H/GN/RD	Green	3.6	20	1250	5
	Red	2.2		1200	5
2STR/LH23/10/H/GN/YW	Green	3.6	20	1250	5
	Yellow	2.2		1000	5
2STR/LH23/10/H/GN/GN	Green	3.6	20	1250	5
	Green	3.6		1250	5
2STR/LH23/10/H/GN/BE	Green	3.6	20	1250	5
	Blue	3.6		1000	5
2STR/LH23/10/H/GN/WE	Green	3.6	20	1250	5
	White	3.6		1000	5
2STR/LH23/10/H/BE/BE	Blue	3.6	20	1200	5
	Blue	3.6		1200	5
2STR/LH23/10/H/BE/WE	Blue	3.6	20	1200	5
	White	3.6		1000	5
2STR/LH23/10/H/BE/RD	Blue	3.6	20	1200	5
	Red	1.9		1200	5
2STR/LH23/10/H/BE/YW	Blue	3.6	20	1200	5
	Yellow	2.2		1000	5

Continued...

Oxley Group Australia Pty Ltd
Email: sales@oxleygroup.com
Tel +61 (0) 2 9967 9488

Oxley Inc.
Email: sales@oxleyinc.com
Tel: +1 (203) 488 1033

Oxley Developments Company Ltd
Email: sales@oxley.co.uk
Tel: +44 (0)1229 840609

Ordering Information	Colour	Forward Voltage (V)	Current (mA)	Luminous Intensity (mcd)	Reverse Voltage (V)
2STR/LH23/10/H/BE/GN	Blue	3.6	20	1200	5
	Green	3.6		1250	5
2STR/LH23/10/H/WE/WE	White	3.6	20	1000	5
	White	3.6		1000	5
2STR/LH23/10/H/WE/RD	White	3.6	20	1000	5
	Red	1.9		1200	5
2STR/LH23/10/H/WE/GN	White	3.6	20	1000	5
	Green	3.6		1000	5
2STR/LH23/10/H/WE/BE	White	3.6	20	1000	5
	Blue	3.6		1200	5

Mean time before failure 90,000 hrs.

Note: The first colour within the order information is located on the left side of the segment as shown. e.g. 2STR/LH23/10/RED/YELLOW

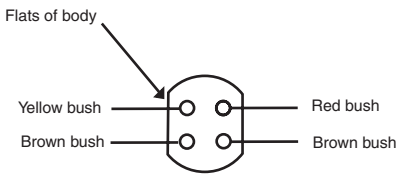

Front Panel View

Oxley Developments Company Ltd
Email: sales@oxley.co.uk
Tel: +44 (0)1229 840609

Oxley Inc.
Email: sales@oxleyinc.com
Tel: +1 (203) 488 1033

Oxley Group Australia Pty Ltd
Email: sales@oxleygroup.com
Tel +61 (0) 2 9967 9488

www.oxleygroup.com/lamps

ODCSM40565/2/2005

Tri-Segmented LED Indicator

Flat Lens

Single Chip LED

IP68-Ø10.0

Features

- Replaces three single indicators
- Independently addressable segments
- Sealed to IP68
- Flat clear diffused lens
- 60° Viewing angle
- Operating temp -40 to 85°C
- Storage temp -55 to 100°C

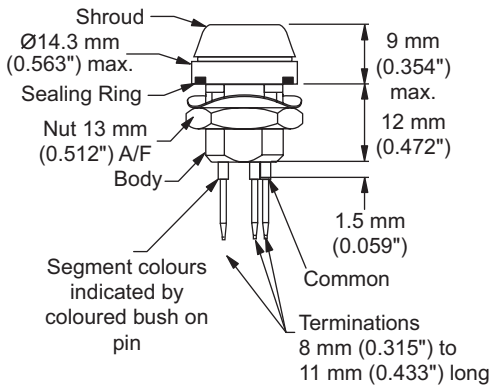

3/STR/LH23/10/-

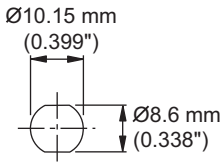

Mounting Hole

Ordering Information and Technical Characteristics

Ordering Information	Colour	Forward Voltage (V)	Current (mA)	Luminous Intensity (mcd)	Reverse Voltage (V)
3STR/LH23/10/R/G/Y	Red	2.2	20	15	5
	Green	2.2		15	
	Yellow	2.2		12	
3STR/LH23/10/R/Y/G	Red	2.2	20	15	5
	Yellow	2.2		12	
	Green	2.2		15	
3STR/LH23/10/R/R/R	Red	2.2	20	15	5
	Red	2.2		15	
	Red	2.2		15	
3STR/LH23/10/G/Y/R	Green	2.2	20	15	5
	Yellow	2.2		12	
	Red	2.2		15	
3STR/LH23/10/Y/R/G	Yellow	2.2	20	12	5
	Red	2.2		15	
	Green	2.2		15	

Continued ...

Oxley Group Australia Pty Ltd
Email: sales@oxleygroup.com
Tel +61 (0) 2 9967 9488

Oxley Inc.
Email: sales@oxleyinc.com
Tel: +1 (203) 488 1033

Oxley Developments Company Ltd
Email: sales@oxley.co.uk
Tel: +44 (0)1229 840609

Ordering Information	Colour	Forward Voltage (V)	Current (mA)	Luminous Intensity (mcd)	Reverse Voltage (V)
3STR/LH23/10/G/G/G	Green	2.2	20	15	5
	Green	2.2		15	
	Green	2.2		15	
3STR/LH23/10/Y/Y/Y	Yellow	2.2	20	12	5
	Yellow	2.2		12	
	Yellow	2.2		12	
3STR/LH23/10/H/R/R/R	Red	1.9	20	1200	5
	Red	1.9		1200	
	Red	1.9		1200	
3STR/LH23/10/H/R/G/Y	Red	1.9	20	1200	5
	Green	3.6		1250	
	Yellow	2.2		1000	
3STR/LH23/10/H/R/Y/G	Red	1.9	20	1200	5
	Yellow	2.2		1000	
	Green	3.6		1250	
3STR/LH23/10/H/R/B/W	Red	1.9	20	1200	5
	Blue	3.6		1200	
	White	3.6		1000	
3STR/LH23/10/H/W/W/W	White	3.6	20	1000	5
	White	3.6		1000	
	White	3.6		1000	
3STR/LH23/10/H/B/W/B	Blue	3.6	20	1200	5
	White	3.6		1000	
	Blue	3.6		1200	
3STR/LH23/10/H/B/Y/G	Blue	3.6	20	1200	5
	Yellow	2.2		1000	
	Green	3.6		1250	
3STR/LH23/10/H/W/B/G	White	3.6	20	1000	5
	Blue	2.2		1000	
	Green	3.6		1250	

Mean time before failure 90,000 hrs.

1) When ordering parts please specify orientation of colours. e.g. 3STR/LH23/10/R/G/Y

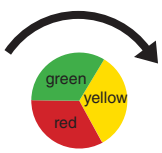

Clockwise

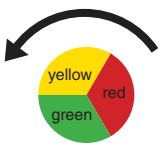

Counter Clockwise

Oxley Developments Company Ltd
Email: sales@oxley.co.uk
Tel: +44 (0)1229 840609

Oxley Inc.
Email: sales@oxleyinc.com
Tel: +1 (203) 488 1033

Oxley Group Australia Pty Ltd
Email: sales@oxleygroup.com
Tel +61 (0) 2 9967 9488

www.oxleygroup.com/lamps

ODCSM40565/2/2005

Low Profile LED Indicator

Fresnel Lens

Single Chip LED

IP66 - Ø10.0

Features

- Plastic fresnel lens
- Rugged brass, black chromed body
- Sealing available to IP66
- Low profile panel mounting
- 80° Viewing angle
- Operating temp -40 to 85°C
- Storage temp -40 to 85°C

Dimensions in mm

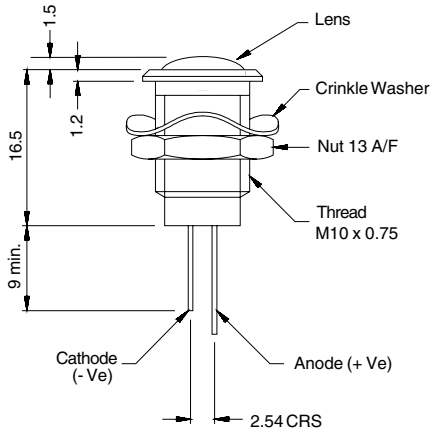

Front View

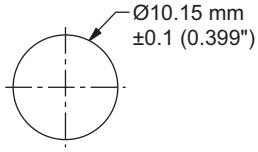

Mounting Hole OXL/CLH/100/-

Ordering Information and Technical Characteristics

Ordering Information	Colour	Forward Voltage (V)	Current (mA)	Luminous Intensity (mcd)	Reverse Voltage (V)
OXL/CLH/100/RD	Red	2.2	20	45	5
OXL/CLH/100/YW	Yellow	2.2	20	45	5
OXL/CLH/100/GN	Green	2.2	20	45	5
OXL/CLH/100/AlGaAsRD	Red	1.9	20	1200	5
OXL/CLH/100/H/YW	Yellow	2.2	20	1000	5
OXL/CLH/100/H/GN	Green	3.6	20	1250	5
OXL/CLH/100/H/BE	Blue	3.6	20	1200	5
OXL/CLH/100/H/WE	White	3.6	20	1000	5
OXL/CLH/100/5/RD	Red	5	15	34	5

Continued ...

Oxley Group Australia Pty Ltd
Email: sales@oxleygroup.com
Tel +61 (0) 2 9967 9488

Oxley Inc.
Email: sales@oxleyinc.com
Tel: +1 (203) 488 1033

Oxley Developments Company Ltd
Email: sales@oxley.co.uk
Tel: +44 (0)1229 840609

Ordering Information	Colour	Forward Voltage (V)	Current (mA)	Luminous Intensity (mcd)	Reverse Voltage (V)
OXL/CLH/100/5/YW	Yellow	5	15	34	5
OXL/CLH/100/5/GN	Green	5	15	34	5
OXL/CLH/100/5/AlGaAsRD	Red	5	15	900	5
OXL/CLH/100/5/H/YW	Yellow	5	15	750	5
OXL/CLH/100/5/H/GN	Green	5	15	940	5
OXL/CLH/100/5/H/BE	Blue	5	15	900	5
OXL/CLH/100/5/H/WE	White	5	15	750	5
OXL/CLH/100/12/RD	Red	12	15	34	12
OXL/CLH/100/12/YW	Yellow	12	15	34	12
OXL/CLH/100/12/GN	Green	12	15	34	12
OXL/CLH/100/12/AlGaAsRD	Red	12	15	900	12
OXL/CLH/100/12/H/YW	Yellow	12	15	750	12
OXL/CLH/100/12/H/GN	Green	12	15	940	12
OXL/CLH/100/12/H/BE	Blue	12	15	900	12
OXL/CLH/100/12/H/WE	White	12	15	750	12
OXL/CLH/100/15/RD	Red	15	15	34	15
OXL/CLH/100/15/YW	Yellow	15	15	34	15
OXL/CLH/100/15/GN	Green	15	15	34	15
OXL/CLH/100/15/AlGaAsRD	Red	15	15	900	15
OXL/CLH/100/15/H/YW	Yellow	15	15	750	15
OXL/CLH/100/15/H/GN	Green	15	15	940	15
OXL/CLH/100/15/H/BE	Blue	15	15	900	15
OXL/CLH/100/15/H/WE	White	15	15	750	15
OXL/CLH/100/24/RD	Red	24	15	34	24
OXL/CLH/100/24/YW	Yellow	24	15	34	24
OXL/CLH/100/24/GN	Green	24	15	34	24
OXL/CLH/100/24/AlGaAsRD	Red	24	15	900	24
OXL/CLH/100/24/H/YW	Yellow	24	15	750	24
OXL/CLH/100/24/H/GN	Green	24	15	940	24
OXL/CLH/100/24/H/BE	Blue	24	15	900	24
OXL/CLH/100/24/H/WE	White	24	15	750	24
OXL/CLH/100/28/RD	Red	28	15	34	28
OXL/CLH/100/28/YW	Yellow	28	15	34	28
OXL/CLH/100/28/GN	Green	28	15	34	28
OXL/CLH/100/28/AlGaAsRD	Red	28	15	900	28
OXL/CLH/100/28/H/YW	Yellow	28	15	750	28
OXL/CLH/100/28/H/GN	Green	28	15	940	28
OXL/CLH/100/28/H/BE	Blue	28	15	900	28
OXL/CLH/100/28/H/WE	White	28	15	750	28

Mean time before failure 90,000 hrs.

1) Coloured lens as standard, optional clear lens available - denoted by **CL** in part numbering.
e.g. OXL/CLH/63/P/CL/GN

2) Black anodised body available - denoted by BB in part number eg. OXL/CLH/63/BB/P/CL/GN

3) Customer specials available on request.

Oxley Developments Company Ltd
Email: sales@oxley.co.uk
Tel: +44 (0)1229 840609

Oxley Inc.
Email: sales@oxleyinc.com
Tel: +1 (203) 488 1033

Oxley Group Australia Pty Ltd
Email: sales@oxleygroup.com
Tel +61 (0) 2 9967 9488

www.oxleygroup.com/lamps
ODCSM40565/2/2005

Prominent Lens

Fresnel Lens

Single Chip LED

IP66 - Ø10.0

Features

- Coloured Plastic fresnel prominent lens wide viewing (100°)
- Rugged brass, black chromed body
- Sealing available to IP66
- Operating temp -40 to 85°C
- Storage temp -40 to 85°C

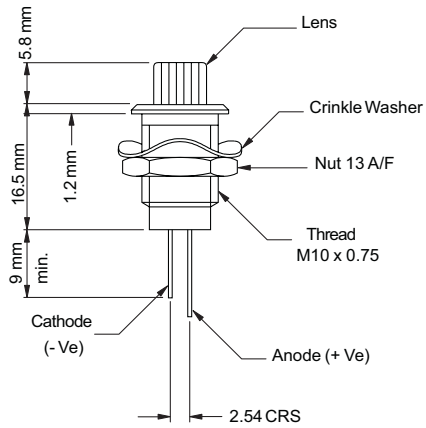

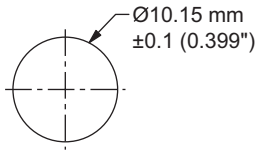

Mounting Hole

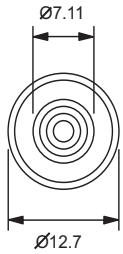

Front View

Ordering Information and Technical Characteristics

Ordering Information	Colour	Forward Voltage (V)	Current (mA)	Luminous Intensity (mcd)	Reverse Voltage (V)
OXL/CLH/100/P/RD	Red	2.2	20	45	5
OXL/CLH/100/P/YW	Yellow	2.2	20	45	5
OXL/CLH/100/P/GN	Green	2.2	20	45	5
OXL/CLH/100/P/H/AlGaAsRD	Red	1.9	20	1200	5
OXL/CLH/100/P/H/YW	Yellow	2.2	20	1000	5
OXL/CLH/100/P/H/GN	Green	3.6	20	1250	5
OXL/CLH/100/P/H/BE	Blue	3.6	20	1200	5
OXL/CLH/100/P/H/WE	White	3.6	20	1000	5

Mean time before failure 90,000 hrs.

1) Voltage variants and customer specials are available on request.

2) Coloured lens as standard, optional clear lens available - denoted by **CL** in part numbering.
e.g. OXL/CLH/63/P/CL/GN

3) Black anodised body available - denoted by BB in part number eg. OXL/CLH/63/BB/P/CL/GN

4) Customer specials available on request.

Oxley Group Australia Pty Ltd
Email: sales@oxleygroup.com
Tel +61 (0) 2 9967 9488

Oxley Inc.
Email: sales@oxleyinc.com
Tel: +1 (203) 488 1033

Oxley Developments Company Ltd
Email: sales@oxley.co.uk
Tel: +44 (0)1229 840609

Type No. - 20XL/CLH/100/-/-
30XL/CLH/100/-/-/-

Bi/Tri-Colour Indicator Lamps — Single Chip LED

Fresnel Lens — IP66 - Ø10.0

Features

- Replaces two/three single indicators
- Black body aids contrast of light output
- Independant LED indication
- Flat Clear diffused lens
- 80° Viewing angle
- Operating temp -40 to 85°C
- Storage temp -40 to 85°C

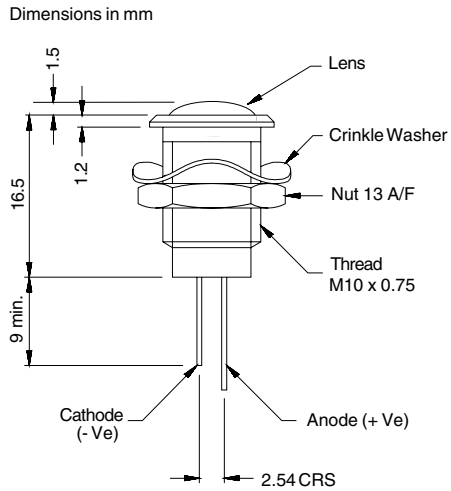

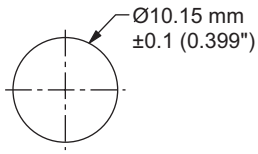

Mounting Hole

Ordering Information and Technical Characteristics

Ordering Information	Colour	Forward Voltage (V)	Current (mA)	Luminous Intensity (mcd)	Reverse Voltage (V)
20XL/CLH/100/R/R	Red	2.2	20	30	5
	Red	2.2		35	
20XL/CLH/100/R/G	Yellow	2.2	20	30	5
	Green	2.2		35	
20XL/CLH/100/R/Y	Green	2.2	20	30	5
	Yellow	2.2		25	
20XL/CLH/100/H/R/R	Red	1.9	20	1200	5
	Red	1.9		1200	

Continued ...

Oxley Developments Company Ltd
Email: sales@oxley.co.uk
Tel: +44 (0)1229 840609

Oxley Inc.
Email: sales@oxleyinc.com
Tel: +1 (203) 488 1033

Oxley Group Australia Pty Ltd
Email: sales@oxleygroup.com
Tel +61 (0) 2 9967 9488

www.oxleygroup.com/lamps
ODCSM40565/2/2005

Ordering Information	Colour	Forward Voltage (V)	Current (mA)	Luminous Intensity (mcd)	Reverse Voltage (V)
20XL/CLH/100/H/R/G	Yellow	2.2	20	1000	5
	Green	3.6		1250	
20XL/CLH/100/H/R/Y	Green	3.6	20	1250	5
	Yelow	3.6		1000	
20XL/CLH100/H/B/W	Blue	3.6	20	1200	5
	White	3.6		1000	
20XL/CLH/100/H/W/W	White	2.2	20	1000	5
	White	2.2		1000	
30XL/CLH/100/R/R/R	Red	2.2	20	30	5
	Red	2.2		30	
	Red	2.2		30	
30XL/CLH/100/R/Y/G	Red	2.2	20	30	5
	Yellow	2.2		25	
	Green	2.2		35	
30XL/CLH/100/R/G/Y	Red	2.2	20	30	5
	Green	2.2		35	
	Yellow	2.2		25	
30XL/CLH/100/H/R/Y/G	Red	1.9	20	1200	5
	Yellow	2.2		1000	
	Green	3.6		1250	
30XL/CLH/100/H/W/B/G	White	3.6	20	1000	5
	Blue	3.6		1200	
	Green	3.6		1250	

Mean time before failure 90,000 hrs.

1) Any colour combinations available on request.

2) 300mm flying leads supplied as standard - other lengths available on request

Oxley Group Australia Pty Ltd
Email: sales@oxleygroup.com
Tel +61 (0) 2 9967 9488

Oxley Inc.
Email: sales@oxleyinc.com
Tel: +1 (203) 488 1033

Oxley Developments Company Ltd
Email: sales@oxley.co.uk
Tel: +44 (0)1229 840609

LED Bulb Replacement

Unipolar

Single Chip LED

T1¾ Midget Flanged Cap

Features

- LED lens
- Replaces less reliable filament bulbs
- Reduces maintenance costs
- Cool light reduces heat dissipation
- Reduces power consumption
- Normal **(30/45/60°)** and wide viewing **(100°)** options available
- Operating temp -40 to 85°C
- Storage temp -40 to 85°C

Option 1
(30/45°viewing angle)

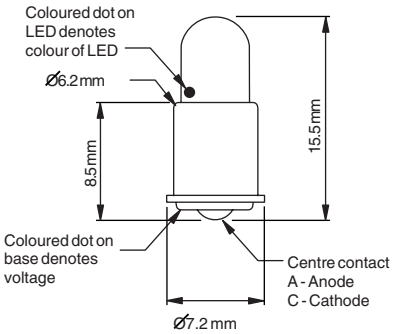

Option 2
(wide angle viewing 100°)

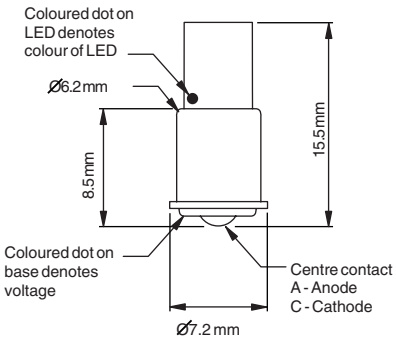

Ordering Information and Technical Characteristics

Ordering Information	Colour	Forward Voltage (V)	Current (mA)	Luminous Intensity (mcd)	Reverse Voltage (V)
ELED/1750/A/6/H/WE	White	6	17	1000	5
ELED/1750/A/6/AlGaAsRD	Red	6	17	1200	5
ELED/1750/A/6/H/AR	Amber	6	17	1000	5
ELED/1750/A/6/H/BE	Blue	6	17	1200	5
ELED/1750/A/6/H/GN	Green	6	17	1250	5
ELED/1750/A/6/H/OE	Orange	6	17	1000	5
ELED/1750/A/12/H/WE	White	12	17	1000	12
ELED/1750/A/12/AlGaAsRD	Red	12	17	1200	12
ELED/1750/A/12/H/AR	Amber	12	17	1000	12
ELED/1750/A/12/H/BE	Blue	12	17	1200	12
ELED/1750/A/12/H/GN	Green	12	17	1250	12

Continued ...

Oxley Developments Company Ltd
Email: sales@oxley.co.uk
Tel: +44 (0)1229 840609

Oxley Inc.
Email: sales@oxleyinc.com
Tel: +1 (203) 488 1033

Oxley Group Australia Pty Ltd
Email: sales@oxleygroup.com
Tel +61 (0) 2 9967 9488

www.oxleygroup.com/lamps

ODCSM40565/2/2005

Ordering Information	Colour	Forward Voltage (V)	Current (mA)	Luminous Intensity (mcd)	Reverse Voltage (V)
ELED/1750/A/12/H/OE	Orange	12	17	1000	12
ELED/1750/A/24/H/WE	White	24	17	1000	24
ELED/1750/A/24/AlGaAsRD	Red	24	17	1200	24
ELED/1750/A/24/H/AR	Amber	24	17	1000	24
ELED/1750/A/24/H/BE	Blue	24	17	1200	24
ELED/1750/A/24/H/GN	Green	24	17	1250	24
ELED/1750/A/24/H/OE	Orange	24	17	1000	24
ELED/1750/A/28/H/WE	White	28	17	1000	28
ELED/1750/A/28/AlGaAsRD	Red	28	17	1200	28
ELED/1750/A/28/H/AR	Amber	28	17	1000	28
ELED/1750/A/28/H/BE	Blue	28	17	1200	28
ELED/1750/A/28/H/GN	Green	28	17	1250	28
ELED/1750/A/28/H/OE	Orange	28	17	1000	28

Mean time before failure 90,000 hrs

1) Optional centre contact cathode available by changing the letter ‘A’ in the part number to ‘C’,

2) Option 2 wide viewing is available denoted by ‘FT’ into the part number. e.g. ELED/1750/A/28/FT/H/GN

3) Customer specials available on request.

Oxley Group Australia Pty Ltd
Email: sales@oxleygroup.com
Tel +61 (0) 2 9967 9488

Oxley Inc.
Email: sales@oxleyinc.com
Tel: +1 (203) 488 1033

Oxley Developments Company Ltd
Email: sales@oxley.co.uk
Tel: +44 (0)1229 840609

LED Bulb Replacement

Multi-Chip LED

Bipolar

T1¾ Midget Flanged Cap

Features

- LED lens
- Replaces unreliable filament bulbs
- Dual polarity D.C. and A.C. operation
- Multi-chip LED configuration
- 120° Viewing angle
- Operating temp -40 to 70°C
- Storage temp -40 to 70°C

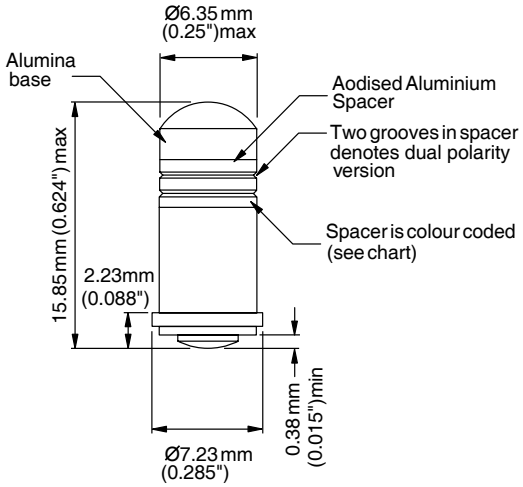

ELED/1750/DMC/-

Ordering Information and Technical Characteristics

Ordering Information	Colour	Forward Voltage (V)	Current (mA)	Luminous Intensity (mcd)	Reverse Voltage (V)
ELED/1750/DMC/12/AL	AlGaAsRed	12	20	70	12
ELED/1750/DMC/12/RD	Red	12	20	40	12
ELED/1750/DMC/12/AR	Amber	12	20	30	12
ELED/1750/DMC/12/YW	Yellow	12	20	40	12
ELED/1750/DMC/12/GN	Green	12	20	70	12
ELED/1750/DMC/12/EG	Emerald GN	12	20	30	12
ELED/1750/DMC/24/AL	AlGaAsRed	24	20	70	24
ELED/1750/DMC/24/RD	Red	24	20	40	24
ELED/1750/DMC/24/AR	Amber	24	20	30	24
ELED/1750/DMC/24/YW	Yellow	24	20	40	24
ELED/1750/DMC/24/GN	Green	24	20	70	24
ELED/1750/DMC/24/EG	Emerald GN	24	20	30	24
ELED/1750/DMC/28/AL	AlGaAsRed	28	20	70	28
ELED/1750/DMC/28/RD	Red	28	20	40	28
ELED/1750/DMC/28/AR	Amber	28	20	30	28
ELED/1750/DMC/28/YW	Yellow	28	20	40	28
ELED/1750/DMC/28/GN	Green	28	20	40	28
ELED/1750/DMC/28/EG	Emerald Green	28	20	30	28

Mean time before failure 90,000 hrs

1) Customer specials available on request.

Oxley Developments Company Ltd
Email: sales@oxley.co.uk
Tel: +44 (0)1229 840609

Oxley Inc.
Email: sales@oxleyinc.com
Tel: +1 (203) 488 1033

Oxley Group Australia Pty Ltd
Email: sales@oxleygroup.com
Tel +61 (0) 2 9967 9488

www.oxleygroup.com/lamps
ODCSM40565/2/2005

LED Bulb Replacement

Single Chip LED

Bipolar

T1¾ Midget Flanged Cap

Features

- LED lens
- Replaces less reliable filament bulbs
- Cool light reduces heat dissipation
- Reduces power consumption
- Reduces maintenance costs
- Dual polarity options
- High Brightness
- 120° Viewing angle
- Operating temp -40 to 85°C
- Storage temp -40 to 85°C

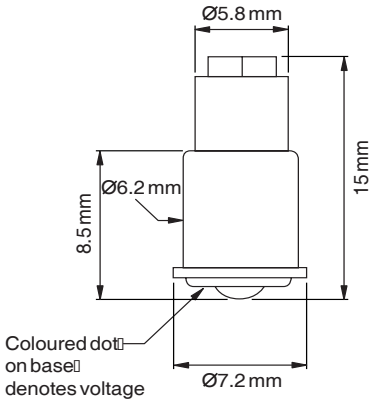

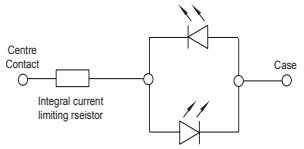

Electrical Configuration

Ordering Information and Technical Characteristics L

Ordering Information	Colour	Forward Voltage (V)	Current (mA)	Luminous Intensity (mcd)	Reverse Voltage (V)
ELED/1750/MF/BT/6/WE	White	6	17	1000	5
ELED/1750/MF/BT/6/RD	Red	6	17	1200	5
ELED/1750/MF/BT/6/AR	Amber	6	17	1000	5
ELED/1750/MF/BT/6/YW	Yellow	6	17	1000	5
ELED/1750/MF/BT/6/GN	Green	6	17	1250	5
ELED/1750/MF/BT/6/BE	Blue	6	17	1200	5
ELED/1750/MF/BT/12/WE	White	12	17	1000	12
ELED/1750/MF/BT/12/RD	Red	12	17	1200	12
ELED/1750/MF/BT/12/AR	Amber	12	17	1000	12
ELED/1750/MF/BT/12/YW	Yellow	12	17	1000	12
ELED/1750/MF/BT/12/GN	Green	12	17	1250	12
ELED/1750/MF/BT/12/BE	Blue	12	17	1200	12
ELED/1750/MF/BT/24/WE	White	24	17	1000	24
ELED/1750/MF/BT/24/RD	Red	24	17	1200	24
ELED/1750/MF/BT/24/AR	Amber	24	17	1000	24
ELED/1750/MF/BT/24/YW	Yellow	24	17	1200	24
ELED/1750/MF/BT/24/GN	Green	24	17	1250	24
ELED/1750/MF/BT/24/BE	Blue	24	17	1200	24
ELED/1750/MF/BT/28/WE	White	28	17	1000	28
ELED/1750/MF/BT/28/RD	Red	28	17	1200	28
ELED/1750/MF/BT/28/AR	Amber	28	17	1000	28
ELED/1750/MF/BT/28/YW	Yellow	28	17	1000	28
ELED/1750/MF/BT/28/GN	Green	28	17	1250	28
ELED/1750/MF/BT/28/BE	Blue	28	17	1200	28

Mean time before failure 90,000 hrs

1) Customer specials available on request.

Oxley Group Australia Pty Ltd
Email: sales@oxleygroup.com
Tel +61 (0) 2 9967 9488

Oxley Inc.
Email: sales@oxleyinc.com
Tel: +1 (203) 488 1033

Oxley Developments Company Ltd
Email: sales@oxley.co.uk
Tel: +44 (0)1229 840609

LED Bulb Replacement

Single Chip LED

Unipolar

T1 Midget Flanged Cap

Features

- Replaces less reliable filament bulbs
- Cool light reduces heat dissipation
- Reduces power consumption
- Reduces maintenance costs
- 180° Viewing angle
- Excellent off-axis viewing
- Meets MIL-DTL-6363H/6363/6A
- Coloured polymer lens
- Operating temp -40 to 85°C
- Storage temp -40 to 85°C

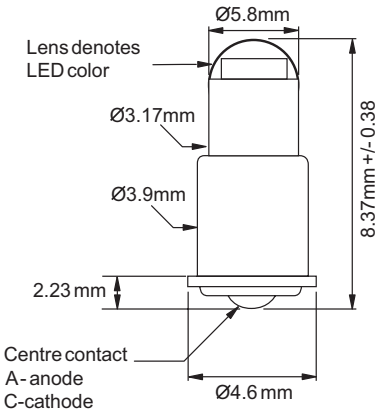

Ordering Information and Technical Characteristics

Ordering Information	Colour	Current (mA)	Luminous Intensity (mcd)	Dominant Wavlength
ELED/682/1/-/-/WE	White	17	40	See note
ELED/682/1/-/-/RD	Red	17	50	660
ELED/682/1/-/-/YW	Yellow	17	45	585
ELED/682/1/-/-/GN	Green	17	45	525
ELED/682/1/-/-/BE	Blue	17	40	475

Mean time before failure 40,000 hrs

Ordering information:

When ordering please state type number, specifying polarity, voltage, and colour

E L E D / 6 8 2 / 1 / A / 2 8 / R D

Centre
A - anode
C - cathode

Voltage
5,6,12,15,24,28

LED Colour
RD, YW, BE, WE, GN

Note: White chromaticity co-ordinates x=0.28, y=0.28

Oxley Developments Company Ltd
Email: sales@oxley.co.uk
Tel: +44 (0)1229 840609

Oxley Inc.
Email: sales@oxleyinc.com
Tel: +1 (203) 488 1033

Oxley Group Australia Pty Ltd
Email: sales@oxleygroup.com
Tel +61 (0) 2 9967 9488

www.oxleygroup.com/lamps
ODCSM40565/2/2005

Recommended Mounting Hardware and Material Details

Ø5.0 mm Mounting Indicator Lamps

SSI/5/- MI/5/-	Chassis Thickness	1.6 mm (0.063") - 3.2 mm (0.126")
	Mounting Hole	Ø5 mm ±0.05 (0.197" ±0.002") to be clean and burr free
	Mounting Hardware	White PTFE bush (black PTFE for -/BB/- versions)
Materials	Body SSI/5/- Body MI/5/-	Brass BS 2874 CZ121 nickel plated (black anodised aluminium alloy to special order) Polymer
	Lens SSI/5/- Lens MI/5/-	Epoxy Polymer
	Flat Termination	Copper alloy - silver plated
	Round Termination	Copper alloy - tin plated
OXL/MIL50/-	Chassis Thickness	1 mm (0.039") - 4 mm (0.157")
	Mounting Hole	Ø5 mm (0.197" ±0.002") to be clean and burr free
	Mounting Hardware	Sealing ring: Flurocarbon rubber Nut: Aluminium alloy Crinkle washer: Aluminium alloy
Materials	Body	Aluminium alloy (black anodised available)
	Lens	Glass
	Shroud	Aluminium alloy - black anodised
	Terminations	Solderability to BS 2011 test T
	Recommended Mounting Torque	1 N m (0.74 lb ft)

Ø6.35 Mounting Indicator Lamp

OXL/CLH/63/-	Chassis Thickness	1.5 mm (0.059") - 5 mm (0.197")
	Mounting Hole	Ø6.35 mm $^{+0.2}_{-0.0}$ (0.25" ±0.0035") to be clean and burr free
	Mounting Hardware	Nut - aluminium alloy Washer - spring steel - zinc plated
Materials	Body	Aluminium or optional black anodised
	Lens	Polycarbonate - clear/coloured
	Terminations	Silver plated or tin lead (solderability exceeds BS 2011 test T)

Oxley Group Australia Pty Ltd
Email: sales@oxleygroup.com
Tel +61 (0) 2 9967 9488

Oxley Inc.
Email: sales@oxleyinc.com
Tel: +1 (203) 488 1033

Oxley Developments Company Ltd
Email: sales@oxley.co.uk
Tel: +44 (0)1229 840609

Ø8.0 mm Mounting Indicator Lamps

PS/LH/8/- STR/LH/8/- STR/NLH/- STR/5/- STR/501/-	Chassis Thickness	1.5 mm (0.059") - 3.2 mm (0.126")
	Mounting Hole	Ø8 mm $^{+0.1}_{-0.0}$ (0.315" ±0.002") to be clean and burr free
	Mounting Hardware	Nut: Aluminium alloy Washer: Beryllium copper alloy - tin plated Sealing ring: PTFE
Materials	Body	Aluminium alloy
	Shroud	Aluminium alloy - black anodised
	Lens	Glass
	Termination	Solderability to BS 2011 test T
	Recommended Mounting Torque	1 N m (0.74 lb ft)
OXL/CLH/80/-	Chassis Thickness	1.5 mm (0.059") - 5 mm (0.197")
	Mounting Hole	Ø8 mm $^{+0.1}_{-0.0}$ (0.315" ±0.002") to be clean and burr free
	Mounting Hardware	Nut: Aluminium alloy Washer: Beryllium copper alloy - tin plated
Materials	Body	Brass - nickel plated/aluminium - black anodised

Ø10.0 mm Mounting Indicator Lamps

STR/LH23/10/-	Chassis Thickness	1.5 mm (0.059") - 6.5 mm (0.256")
	Mounting Hole	Ø10 mm $^{+0.1}_{-0.0}$ (0.394" ±0.002") to be clean and burr free
	Mounting Hardware	Nut: Aluminium alloy Washer: Beryllium copper alloy - tin plated Sealing ring: Flurocarbon rubber
Materials	Body	Aluminium alloy, black anodised available
	Lens	Glass
	Termination	Solderability to BS 2011 test T
	Recommended Mounting Torque	1 N m (0.74 lb ft)
OXL/CLH/100/- 2OXL/CLH/100/-	Chassis Thickness	1.5 mm (0.059") - 6.5 mm (0.256")
	Mounting Hole	Ø10 mm $^{+0.1}_{-0.0}$ (0.394" ±0.002") to be clean and burr free.
	Mounting Hardware	Nut: Aluminium alloy Washer: Beryllium copper alloy - tin plated
Materials	Body	Aluminium alloy - black anodised
	Lens	Polycarbonate - clear/coloured

Oxley Developments Company Ltd
Email: sales@oxley.co.uk
Tel: +44 (0)1229 840609

Oxley Inc.
Email: sales@oxleyinc.com
Tel: +1 (203) 488 1033

Oxley Group Australia Pty Ltd
Email: sales@oxleygroup.com
Tel +61 (0) 2 9967 9488

www.oxleygroup.com/lamps
ODCSM40565/2/2005

Flying Leads

All indicator lamps are available with flying lead terminations of a specified length given in centimetres. Standard colours for temination wire are shown below.

Order Code	Voltage Supply	Wire Colour	Wire Length	Wire Type	Comments
FL20	1.9 - 3.6 V dc	Red - anode Black - cathode	20 cm	Type 44 Standard insulated wire 24 gauge.	Available on all Panel Indicators 20 cm length standard.
	5 - 28 V dc	Red - anode Black - cathode Blue sleeving 5 V dc operation Yellow sleeving 12 V dc operation Green sleeving 15 V dc operation Brown sleeving 24 V dc operation Violet sleeving 28 V dc operation			
	110 V ac/dc	Black wire (Black sleeving) Black wire (Blue sleeving)			
	240 V ac/dc	Black wire (Black sleeving) Black wire (Black termination)			

Note: Suffix ‘FL20’ denotes a standard flying lead length of 20 cm (200 mm).

1) Optional customer preference available: e.g. FL90 (90 cm) etc. dependent on customer.

Oxley Group Australia Pty Ltd
Email: sales@oxleygroup.com
Tel +61 (0) 2 9967 9488

Oxley Inc.
Email: sales@oxleyinc.com
Tel: +1 (203) 488 1033

Oxley Developments Company Ltd
Email: sales@oxley.co.uk
Tel: +44 (0)1229 840609

Lamp Test Facility

Panel Mount Indicator Lamps are available with an additional Anode/Cathode termination to provde a separate line test facility.

Termination	Circuit	Comments
20 cm of flying leads or customer preference	TEST NEGATIVE 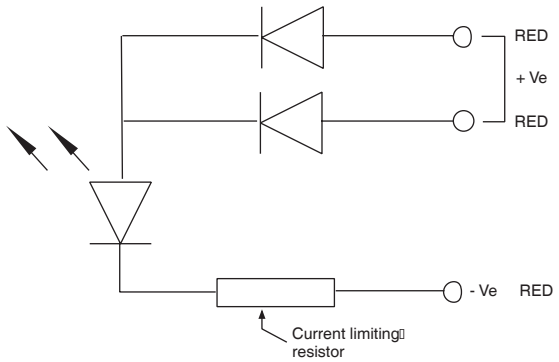 TEST POSITIVE 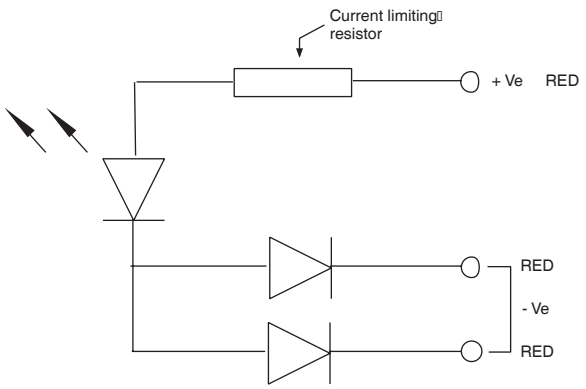 	Available against the following series:- STR/LH/8/- STR/LH23/10/- OXL/CLH/100/- Add LT to ordering suffix for Test Negative Add LT/A to ordering suffix for Test Positive

Oxley Developments Company Ltd
Email: sales@oxley.co.uk
Tel: +44 (0)1229 840609

Oxley Inc.
Email: sales@oxleyinc.com
Tel: +1 (203) 488 1033

Oxley Group Australia Pty Ltd
Email: sales@oxleygroup.com
Tel +61 (0) 2 9967 9488

www.oxleygroup.com/lamps
ODCSM40565/2/2005

Circuit Diagrams

Single Chip LED Models	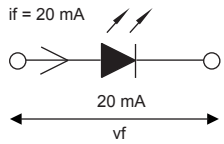	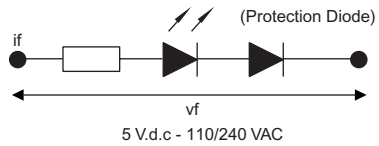
Bi-Colour LED Models 2 pin Devices	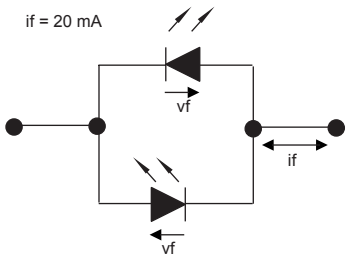	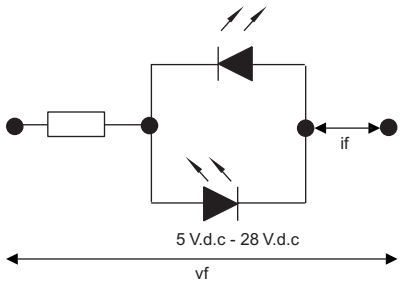
Bi-Colour LED Models 3 lead Device	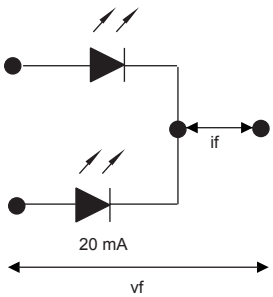	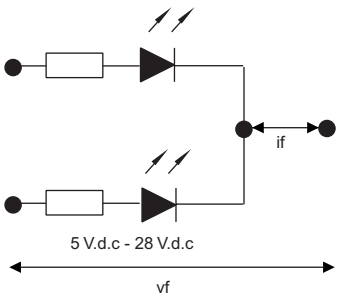
Neon Models		

Oxley Group Australia Pty Ltd
Email: sales@oxleygroup.com
Tel +61 (0) 2 9967 9488

Oxley Inc.
Email: sales@oxleyinc.com
Tel: +1 (203) 488 1033

Oxley Developments Company Ltd
Email: sales@oxley.co.uk
Tel: +44 (0)1229 840609

Lens Design

Specification

All models are fitted with robust shatterproof glass lens assemblies for advanced LED panel lamps and Fresnel lens assemblies for LED panel lamps which have been specially designed to optically match the LED and neon output characteristics.

Lens Characteristics

Clear diffused Flat Glass/Polycarbonate Fresnel Lens:	Ideal for low profile wide viewer off-axis of 135° Combined with black anodised surround.
Sunlight Readable Filtered Flat Glass Lens:	Excellent solution for applications where sunlight viewability is critical. The special sunlight viewable filter provides excellent high on/off contrast ratio whilst giving excellent focused and wide viewing characteristics.
Clear Diffused Plano-Convex Glass/Polycarbonate Lens:	Ideal for applications where on-axis viewing is critical but also giving a limited degree of off-axis viewing.
Clear Diffused Domed Glass/Polycarbonate Lens:	Excellent off-axis viewing characteristics of 180° makes this lens ideal choice for applications requiring wide angle visibility in low normal lighting conditions.
Coloured Plano-Convex Glass Lens:	Ideal for neon applications where colour indication is required.

Oxley Developments Company Ltd
Email: sales@oxley.co.uk
Tel: +44 (0)1229 840609

Oxley Inc.
Email: sales@oxleyinc.com
Tel: +1 (203) 488 1033

Oxley Group Australia Pty Ltd
Email: sales@oxleygroup.com
Tel +61 (0) 2 9967 9488

www.oxleygroup.com/lamps
ODCSM40565/2/2005

The CIE System

The first international agreement concerning the mathematical treatment of colour was concluded at the "Commission Internationale de l'Eclairage" conference which was held in 1931 in the University town of Cambridge, UK. The result was the CIE chromaticity diagram. This system is an adaptation from the 'Maxwell colour triangle' with the addition of two co-ordinates, x and y, used on the axis of a graph, colours can therefore be defined by plotting the x, y co-ordinates. The curved outer line is known as the 'spectrum focus' and represents pure spectral colours (single wavelength). LED colours fall on or close to this line while incandescent sources fall near to the centre of the graph, within the white area.

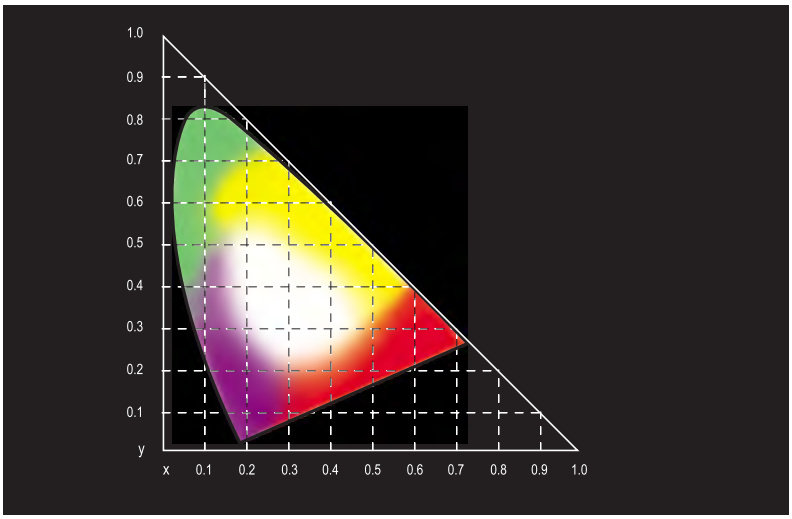

Spectral Diagram

The spectral diagram or graph of an LED shows the percentage of radiated light against wavelength and is referred to as the LED 'spectral curve'. The spectral distribution graph displays individual LED spectral curves, which can be seen to be a narrow band of light. The spectral response curve (Vl) of the human eye is also shown which illustrates that green LED emission lies close to the maximum value of this curve, whilst the response for red and blue LEDs drops rapidly. Therefore a 565 nm green LED appears approximately nine times brighter than a 650 nm red LED of the same efficiency.

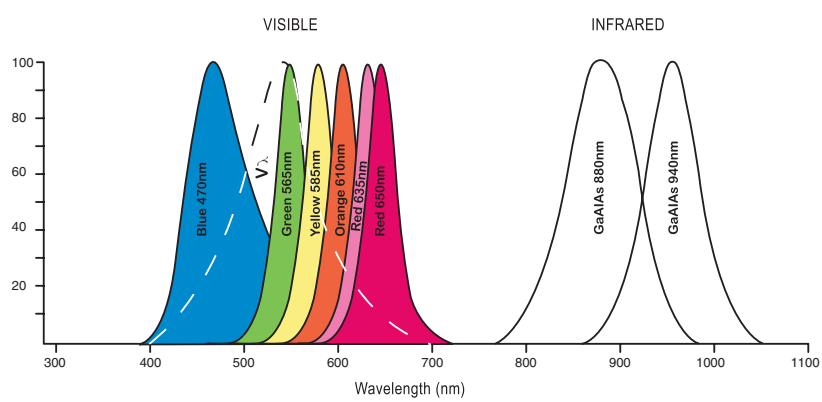

Oxley Group Australia Pty Ltd
Email: sales@oxleygroup.com
Tel +61 (0) 2 9967 9488

Oxley Inc.
Email: sales@oxleyinc.com
Tel: +1 (203) 488 1033

Oxley Developments Company Ltd
Email: sales@oxley.co.uk
Tel: +44 (0)1229 840609

Manufacturing partner India

Jindal Rectifiers
Plot Nos. 195, 163 & 237, Sector 24
Faridabad – 121 005. India

t: +91 129 2233194
+91 129 2233224
+91 129 4318001 to 05
f: +91 129 2233983
e: unit3@jindalrectifiers.com
electronics@jindalrectifiers.com
blr@jindalrectifiers.com

Oxley Developments Company Ltd
Priory Park Ulverston Cumbria LA12 9QG United Kingdom
t: +44 (0) 1229 483226 f: +44 (0) 1229 581851 e: sales@oxleygroup.com

Oxley Inc
31 Business Park Drive Branford CT 06405 USA
t: +1 (203) 488 1033 f: +1 (203) 481 6971 e: info@oxleygroup.com

Company Approvals: BS EN ISO 9001:2008 • BS EN 9100: Rev C • BS EN ISO 14001:2004

www.oxleygroup.com